# Service Manual

# *ElectroniK 15** Instruments

NUMBER 811-63 ISSUE 1

HONEYWELL - Industrial Products Group Wayne and Windrim Aves., Phila.44, Pa.

*Trademark - Honeywell

## NUMERICAL INDEX

## SERVICE MANUAL

601-1
603-1
604-1
605-1
606-1
611-2
611-10
611-28
611-31
612-17
613-30
614-7
614-15
614-29
615-18
615-34
615-35
615-40
615-41
616-36
617-37
619-44
631-17
631-18
631-21
632-5
632-19
632-20
633-11
633-14
633-15
633-16
633-22
633-23
634-6
634-7
634-13
642-1
366697
642-6
369959
642-7
652114
642-8
715002
642-9
356360
356411
356414
642-15
361939
642-16
48-R-11-A
642-20
360493
366961
643-14
643-18
643-19
644-5
651-12
652-1
652-5
654-10
654-11
661-1
661-2
661-3
661-19
661-20
662-5
662-6
662-7
662-8
662-9
662-10
662-11
662-12
662-16
662-17
662-18
666-13
26-G-01
26-G-47
666-14
26-G-35
26-G-66
666-15
26-G-34
26-G-36
691-1
693-1
699-2

**INSTRUMENT**

**TABLE OF CONTENTS**

TROUBLESHOOTING

General 611-10

1530187 1/4-Second Pen Speed 611-28

1530785 Chromatography Recorder 611-2

Philips Electronic Instruments, Norelco Strip Chart Recorder No. 52563 612-17

General Dynamics Astronautics, Single Pen Graphic Recorder No. 27-01567-1 611-31

STRAY VOLTAGES

General 619-44

**MEASURING COMPONENTS** **TABLE OF CONTENTS**

SLIDEWIRE

Straight (Honed for 1.0-second balance speed) 643-14

Straight 643-19

Helical 643-18

Helical (Transmitting) 693-1

POWER SUPPLIES

Constant Voltage Unit (1958 to 1962) 632-5

Constant Voltage Unit (1963-) 634-7

AC-DC Voltage Unit 634-13

Regulated Power Supply (Turbograph) 691-1

MEASURING CIRCUIT UNIT - RESISTOR CALCULATIONS

Potentiometer (Table II designations 01, 02, 07, 11, 13, 14, 15) 633-15

Potentiometer (Table II designations 03 and 04) 633-16

Potentiometer (Table II designation 05) 634-6

Potentiometer (Table II designation 54) 633-11

Tachometer (Table II designation 11) 633-22

Resistance Thermometer (Table II designation 30) 633-14

Turbograph 633-15

Turbograph (duplex) 633-23

**CALIBRATION**

Test Connections (Table II des. 01, 02, 03, 04, 06, 07) 631-17

Potentiometer (Table II des. 01, 02, 03, 04, 06, 07) 632-19

Potentiometer (Table II des. 05) 614-7

Potentiometer (Table II des. 54) 614-29

4 to 20 Milliampere (Table II des. 13 and 14) 631-21

| | |
|---|---|
| Resistance Thermometer (Table II des. 30) | 631-18 |
| Adjustable Span, Adjustable Zero (standard) | 613-30 |
| Philips Electronic Instruments, Norelco Strip Chart Recorder No. 52563 | 615-18 |
| American Bosch Arma | 614-15 |
| Turbograph | 632-20 |

# BALANCING COMPONENTS

## TABLE OF CONTENTS


| | Section |
|---|---|
| BALANCING MOTOR | 644-5 |
| AMPLIFIER | |
| Part No. | |
| 356358 | 642-9 |
| 356410 | 642-9 |
| 356413 | 642-9 |
| 360495 | 642-20 |
| 361925 | 642-15 |
| 366698 | 642-1 |
| 369960 | 642-6 |
| 652113 | 642-7 |
| 687151 | 642-8 |
| 700564 | 642-20 |
| 48R11A | 642-16 |

Digitized by the Internet Archive
in 2025

https://archive.org/details/manualsplus_07533

## INDICATING COMPONENTS — TABLE OF CONTENTS


| | |
|---|---|
| CYCLIC PRINT MECHANISM | 654-10 |
| SYNCHRO-BALANCE PRINT MECHANISM | 654-11 |
| CHART DRIVE | 651-12 |
| CHART MOTOR | 644-5 |
| INDICATING SYSTEM ALIGNMENT | 617-37 |
| DRIVE CABLES | |
| Circular Chart and Circular Scale | 615-41 |
| Strip Chart (general) | 615-34 |
| Strip Chart (1/4-Second Pen Speed) | 611-28 |
| Strip Chart (Two Pen, 1.0-Second Pen Speed) | 615-35 |
| Strip Chart (Two Pen, 2.0-Second Pen Speed or slower) | 615-40 |
| Strip Chart - extended range | 616-36 |
| Chromatography Recorder | 652-1 |
| Philips Electronic Instruments, Norelco Strip Chart Recorder No. 52563 | 652-5 |
| American Bosch Arma | 614-15 |
| General Dynamics Astronautics, Single Pen Graphic Recorder No. 27-01567-1 | 652-9 |

**PRIMARY CONTROL** **TABLE OF CONTENTS**

INDEX DRIVE CABLE

Strip Chart Recorder 662-5
Circular Chart Recorder 662-6

ELECTRIC PROPORTIONING CONTROL

Proportioning Control Mechanism 662-12
Electr-O-Line Three-Mode Unit 666-13
Electr-O-Pulse Three-Mode Unit 666-14
Electr-O-Volt Three-Mode Unit 666-15
Electr-O-Line Transistorized Three Mode Unit 661-1
Electr-O-Volt Transistorized Three Mode Unit 661-2
Electr-O- Pulse Transistorized Two Mode Unit 661-3

PNEUMATIC CONTROL

On-Off 662-8
THROTTLOR 662-9
AIR-O-LINE (Batch) 662-10
AIR-O-LINE (standard) 662-11

CONTACT CONTROL

Electr-O-Vane Control Unit 662-7
Mercury Switches - Circular Chart Recorder 662-16
Mercury Switches - Circular Scale Indicator 662-17
Mercury Switches - Strip Chart Recorder 662-18

Alignment of Differential Mechanism
Circular Chart Recorder 661-19
Alignment of Differential Mechanism
Strip Chart Recorder 661-20

INSTRUMENT SERVICE

## 1. TROUBLESHOOTING

**a. General.** The following paragraphs describe checkout procedures for isolating faults of the instrument according to symptoms of malfunction. To locate and correct a particular fault, refer to the applicable symptom in the following paragraphs and perform the indicated steps. A wiring diagram is included in this instruction manual for check point location.

Warning: If the alternate chassis latch arrangement is used for full floating shield, the chassis of this instrument will be at stray potential as required by operating conditions. If the chassis is at a stray potential of 30 volts ac or greater, a HIGH VOLTAGE warning label should be placed on the door glass. The serviceman has no guarantee that this precaution has been taken: DETERMINE THE CHASSIS POTENTIAL before touching the chassis!

**b. Symptoms.**

(1) Instrument does not drive. Pen does not move regardless of the size of the input signal.

(a) Make sure line voltage appears across the A-C LINE terminals on the terminal blocks in the case and chassis.

(b) Disconnect instrument power and turn the balancing motor pinion to determine if the motor is free to turn.

(c) Measure the resistance of the motor windings. The amplifier winding and the line winding should be about 500 ohms each.

(d) If checks (a) through (c) show proper connections and function, the trouble may be in the amplifier. Refer to the amplifier service section and troubleshoot the amplifier.

(2) Instrument is driving against a stop.

(a) Disconnect the primary element and make test connections as described in the section on calibrating the instrument.

(b) If the instrument responds to the millivolt source, check the primary element and its associated circuitry. The element may be open or shorted, or the stray level may exceed instrument specifications.

(c) If the instrument does not respond to the millivolt source, make the following checks:

1. Check continuity of input wiring between input terminal panel and measuring circuit panel.
2. Check continuity of shielding. Refer to attached wiring diagram.
3. Check that the jumper is installed between the shield connection and either input terminal.
4. Check output of constant voltage circuit.
5. Check measuring circuit.
6. Check amplifier.

Note. Specific checkout procedures for the measuring circuit, constant voltage circuit, and the amplifier circuit are given in their respective service sections.

(3) Instrument is erratic.

(a) Check the primary element for an intermittent open and for transient stray signals which exceed instrument specifications.

(b) Shake the input wires while observing instrument performance to see if an intermittent open or short can be found.

(c) Check all electrical connections.

(d) Inspect the slidewire as described in this section.

(4) Instrument is insensitive.

(a) Check the shield wiring as described in Section 2.

(b) Make sure stray level does not exceed instrument specifications.

(c) Make sure gearing and cabling of balance system are free.

(d) Check amplifier.

(5) Calibration has shifted radically.

(a) Make sure zero and span adjustments are set correctly.

(b) Check output of constant voltage circuit.

(c) Make sure stray level does not exceed instrument specifications.

(d) Check measuring circuit.

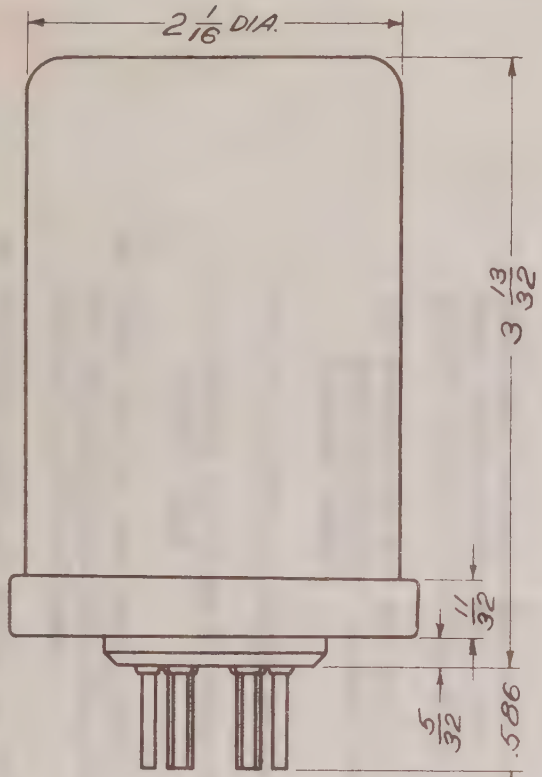


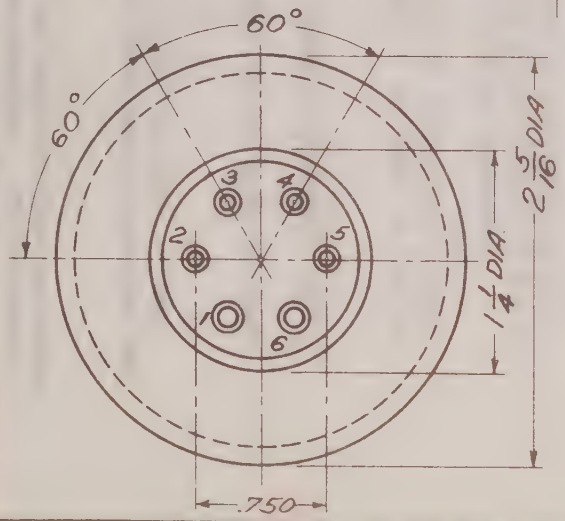


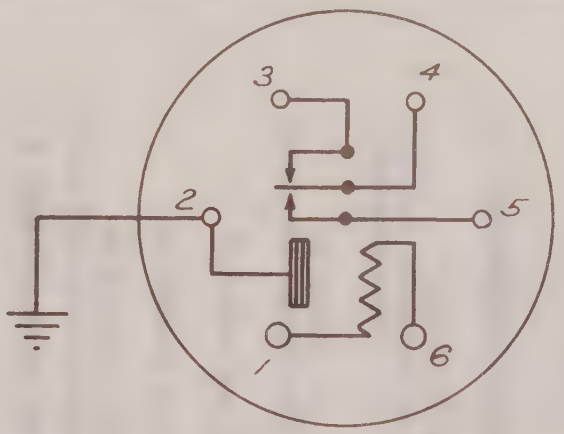


SCHEMATIC WIRING DIAGRAM

NOTE:
1. EXCITATION COIL RATING:
   6.3 VOLTS, 55 MILLIAMP. AT 60 C.P.S.
2. CONTACT RATING:
   6 VOLTS OR 1 MILLIAMP. MAX.
   (100 MICROWATTS MAXIMUM VOLTAGE x CURRENT AT CONTACTS)
3. PHASE LAG: 17° ± 5°
4. CONTACT TIME: 55% NOMINAL.
   SHORTING TIME: 5% TWICE EACH CYCLE.
5. MOUNTING:
   VERTICAL MOUNTING OR HORIZONTAL IF PINS 1 & 4 ARE IN VERTICAL PLANE.
6. CONNECTIONS:
   FITS 6-PIN RADIO TUBE SOCKET, "AMPHENOL" TYPE SP-6 OR EQUIVALENT.

4. 6-20-57 EF.

DR-6932-15-B
TITLE: 75829-1&7 WAS 75829-1 ITEM.
NOTE 1: 55 MILLIAMP. WAS 60 M.A.
REMOVED NOTE 2
3. 8-19-55 MC

D.R. 3186-3
REVISED NOTES 1 TO 3.
ADDED NOTES 4 TO 7.
REDRAWN.
FORM NO. F-2145

| ISSUE NO. | | | | APP. |
|---|---|---|---|---|
| M-H | | | | |
| TORONTO | | | | |
| LONDON | | | | |
| REPRODUCTION LOCATED AT | | JOB NOS. | | USED ON |

LIMITS — ON DIMENSIONS WHERE LIMITS ARE NOT SHOWN USE THE FOLLOWING: —
ON ALL DECIMAL DIMENSIONS ± .002
ON ALL OTHER LINEAR DIMENSIONS ± .010
ANGULAR DIMENSIONS ± 1°

| PROJ. ENGR. | DRAWN | CHECKED | APPROVED |
|---|---|---|---|
| RJ | JWC | V | MC |

DIMENSION DRAWING OF PART NO. 75829-1&7 D.C.-A.C. CONVERTER.

MINNEAPOLIS-HONEYWELL REG. CO.
BROWN INSTRUMENTS DIVISION
PHILADELPHIA, PA., U. S. A.

| SCALE | DRAWING NO. |
|---|---|
| DATE 8-18-55 | 23-G-23 |

MINNEAPOLIS-HONEYWELL REG. CO.

BROWN INSTRUMENTS DIVISION

DC-TO-DC CONVERTER

FOR PART NO 22852-1X4

DIMENSION DRAWING

INSTRUMENT SERVICE

## 1. GENERAL

This section includes procedures for the isolation of malfunctions by performance symptoms, for the isolation of defective components by voltage and resistance checks, and for the disassembly, reassembly, and adjustment of the instrument to correct for a malfunction. Wiring diagrams and check point location diagrams are included in this section.

## 2. TROUBLESHOOTING PROCEDURE

The servicing procedures are intended to permit maximum analysis with minimum equipment and minimum downtime. The following approach is used:

**a.** Identify the malfunction in terms of instrument performance and locate the trouble under Symptomatic Analysis.

**b.** Follow the procedures to isolate the faulty component.

**c.** Replace a faulty component whenever possible.

**d.** Separate sections include troubleshooting procedures for placing some defective components back in operation.

## 3. SYMPTOMATIC ANALYSIS

### a. No Drive

(1). Make sure the instrument and its various assemblies are being supplied with power. With the power switch in the ON position check for 120 Vac at the following locations:

(a) Between the a-c line hot and neutral terminals on the three-point power terminal block in the back of the instrument case.

(b) At the power terminals on the chassis terminal block.

(c) Between the white and black leads on the quick-connect amplifier plug.

(2) Check that the cable drive system is free to move. Turn off instrument power and rotate the drive gear to position the indicator at 50% full scale.

(3) Turn the instrument power on. If the indicator does not move the condition of "No Drive" has been verified. If the indicator moves to either end of scale refer to the symptom "Drives Against Stop".

(4) Remove the primary element connections and use a multimeter to check for continuity across the input terminals; observe proper polarity. The resistance should be less than 100,000 ohms. During this test the multimeter is applying a voltage to the instrument; if this causes the balancing motor to drive, the trouble is external to the instrument. Check the primary element and its wiring.

(5) If the motor does not drive in step (4), connect the multimeter across the input terminals of the amplifier. If this causes the motor to drive the trouble is probably in the measuring circuit (this includes the slidewire); check these components.

(6) If the motor fails to drive in step (5), use a second multimeter to check the voltage across the control winding of the balancing motor. The voltage across the control winding terminals on the chassis terminal block (see schematic) may be analyzed as follows:

(a) If the voltage is in the order of 300 to 400 Vac, the control winding of the balancing motor is probably open.

(b) If the voltage is approximately line voltage, the line winding of the balancing motor is probably open.

(c) If the voltage is less than 100 Vac, the amplifier may be defective; if the voltage is almost zero, however, the control winding of the balancing motor is probably shorted.

NOTE: If a second multimeter is not available a flashlight dry cell can be used to provide a drive signal.

(7) Replace the suspected component if a spare is available.

**b. Drives Against a Stop**

(1) Disconnect the primary element and connect a multimeter across the measuring circuit input terminals. If the instrument does not respond reverse the multimeter connections.

(2) If the instrument responds in step 1:

(a) Check the primary element and its associated circuitry.

(b) Check slidewire and contactors for dirt, misalignment, or excessive wear.

(c) Check continuity of slidewire at measuring circuit connections.

(d) Check output of Constant Voltage Unit.

(e) Check measuring circuit resistances.

(f) Check amplifier by substitution.

### c. Jumpy

(1) Shake the various internal input wires, while observing instrument performance, to see if an intermittent open circuit can be found. Also check the primary element and associated external wiring for an open circuit. Check for transient stray signals which may exceed the instrument specifications.

(2) Check all connections to the amplifier and power assembly circuits, the Measuring Circuit Unit, the Constant Voltage Unit, the chassis terminal block and the slidewire.

(3) Check the slidewire contactors for excessive wear, poor tension or misalignment; check the slidewire for dirt or wear.

### d. Instrument Is Insensitive

(1) Check amplifier sensitivity setting.

(2) Check shield connections and reference wiring (if applicable).

(3) Verify that stray level does not exceed instrument specifications.

(4) Make sure gearing and cabling of balance system are free to move.

(5) Check amplifier (by substitution if a spare is available).

### e. Calibration Has Shifted Radically

(1) Make sure no one has tampered with zero or span adjustments.

(2) Check output of Constant Voltage Unit.

(3) Check stray level.

(4) Check Measuring Circuit Unit (by substitution, if a spare is available).

(5) Check that amplifier fail-safe feature has not been removed (or added following calibration).

(6) Check that drive cable is securely attached to indicator assembly.

## 1. GENERAL

This section includes systematic procedures for isolating and correcting trouble, with minimum equipment and downtime. The source of trouble is located by symptomatic analysis based on performance checks and voltage and resistance checks using the wiring and check point location diagrams. For replacement of isolated defective components, dissassembly, reassembly and adjustment procedures are included.

## 2. PROCEDURES

a. Where possible, identify the malfunction or failure with one of those listed under symptomatic analysis.

b. Follow the given procedures to isolate the source of trouble, and to replace a defective component.

c. Refer to other Service sections in this manual to troubleshoot major components.

## 3. SYMPTOMATIC ANALYSIS

### a. NO DRIVE

(1) Make sure the instrument and its various assemblies are powered. With the power switch on, check for 120 volts ac at the following locations:

(a) Between a-c line hot and neutral terminals on three-point power terminal block in the back of instrument case.

(b) At power terminals on chassis terminal block.

(c) Between white and black leads on quick-connect amplifier plug.

(2) Check that cable drive system moves freely as follows. Turn off instrument power and move the pen carriage until indicator is at 50 per cent of full scale.

NOTE: If the drive cable has broken, refer to par. 4 and install a new drive cable.

(3) Turn instrument power on. If indicator moves to either end of scale, refer to symptom "Drives Against Stop".

(4) Remove primary element connections and use a multimeter to check for continuity across input terminals; observe proper polarity. Resistance should be less than 100,000 ohms. During

this test the multimeter is applying a voltage to the instrument; if this causes the balancing motor to drive, the trouble is external to the instrument. Check primary element and its wiring.

(5) If motor does not drive in step (4), connect multimeter across input terminals of amplifier. If this causes motor to drive, trouble is probably in the measuring circuit including the slidewire. Check these components.

(6) If balance motor fails to drive in step (5), remove both 6V6 tubes from their sockets. Check voltages at 3 and 8 of both tube sockets. If no voltage is indicated, the motor control winding may be open or short-circuited. Switch off instrument power and disconnect the five motor leads from chassis terminal board. Refer to the following table and measure resistance of motor windings.

| Connect ohmmeter between | Resistance of winding |
|---|---|
| white and yellow leads | 292 Ω ± 10 per cent |
| blue and green leads | 1168 Ω ± 10 per cent |
| blue and red leads | 584 Ω ± 10 per cent |

(7) If incorrect resistance is obtained, indicating an open or short-circuited winding, obtain a replacement motor from Honeywell, Brown Instrument Division.

NOTE: The "motor" servicing section in this manual applies to the chart drive motor which can be disassembled and serviced in the field.

(8) If correct resistances are obtained, the amplifier is probably defective. Refer to amplifier service section for troubleshooting data.

**b. DRIVES AGAINST A STOP**

(1) Reinstall 6V6 tubes and reconnect balance motor. Switch on instrument power. Connect the ohmmeter across measuring circuit input terminals (primary element should be disconnected). If instrument does not respond, reverse ohmmeter connections.

(2) If instrument responds in step (1):

(a) Check primary element and its associated circuitry.

(b) Check slidewire and contactors for dirt, misalignment, or excessive wear.

(c) Check continuity of slidewire at measuring circuit connections.

(d) Check output of Constant Voltage Unit (see Service section for this unit).

(e) Check measuring circuit resistances.

(f) Check amplifier by substituting a spare.

**c. ERRATIC OPERATION**

(1) Shake the various internal input wires, while observing instrument performance, to check for an intermittent open circuit. Similarly, check the primary element and associated external wiring. Check for transient stray signals which may exceed instrument specifications.

(2) Check all connections to amplifier and power assembly circuits, Measuring Circuit Unit, Constant Voltage Unit, chassis terminal block and the slidewire.

(3) Check the slidewire contactors for excessive wear, poor tension or misalignment; check slidewire for dirt or wear.

**d. INSTRUMENT IS INSENSITIVE**

(1) Check amplifier sensitivity setting.

(2) Check shield connections and reference wiring (if applicable).

(3) Verify that stray level does not exceed instrument specifications.

(4) Make sure cabling of balance system is free to move.

(5) Check amplifier (by substitution if a spare is available).

(6) Check damping adjustment (refer to calibration procedures).

**e. CALIBRATION HAS SHIFTED RADICALLY**

(1) Make sure no one has tampered with slidewire zero or instrument span adjustments.

(2) Check output of Constant Voltage Unit (see Service section for this unit).

(3) Check stray level.

(4) Check Measuring Circuit Unit (by substitution, if a spare is available).

(5) Check that drive cable is securely attached to indicator assembly.

## 4. DRIVE CABLE REPLACEMENT

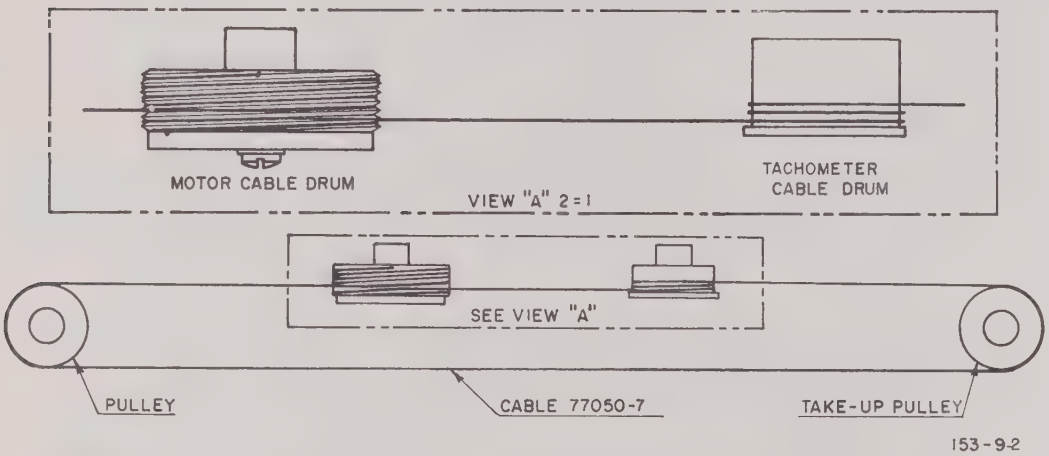


Figure 1. Drive Cable Installation

a. Remove end cap from motor drum and remove any remnants of broken cable.

b. Place locking tool, Part No. 365330 on motor shaft. Wrap four turns of cable counterclockwise on motor drum starting in the first full groove from the back of drum. Lock drum by tightening locking tool hand-tight.

c. Route the cable counterclockwise around left-hand pulley.

d. Lock pen carriage on cable at zero end of travel.

e. Insert a gain screw driver or similar object in take-up pulley to relieve tension. Route cable counterclockwise around take-up pulley and then to tachometer drum.

f. Wrap two turns of cable counterclockwise around tachometer drum so that the last turn is adjacent to the drum rim. Route cable to the motor drum n end cap.

g. Insert screw in end cap. Wrap remaining cable around end cap by rotating end cap counterclockwise. While maintaining cable tension, place end cap in position and tighten screw securely. Remove object from take-up pulley to restore tension. Loosen locking tool on motor drum.

h. Move pen carriage up and down scale feeding cable into proper grooves on motor drum.

h. Slowly move pen carriage toward 100 per cent of full scale while watching cable on tachometer drum. Cable must not run off drum. If it appears that cable will run off drum before full scale is reached, proceed as follows:

(1) Lock motor drum and loosen pen carriage from cable. Slide pen carriage to the 100 per cent stop and tighten pen carriage on cable.

(2) Unlock motor drum and move pen carriage to the zero per cent end and back to the 100 per cent stop while observing cable on both drums. Cable must remain on both drums during this travel. If not, repeat step (1). If pen carriage stops short of zero end, cable is probably wound too many turns on drums.

(3) Move pen carriage up and down scale feeding cable into proper grooves on motor drum.

**a. General.**

The following paragraphs describe checkout procedures for isolating faults of the instrument according to symptoms of malfunction. To locate and correct a particular fault, refer to the applicable symptom in the following paragraphs and perform the indicated steps. A wiring diagram is included in this instruction manual for check point location.

## 2. SYMPTOMATIC ANALYSIS

(1) Instrument does not drive. Pen does not move regardless of the size of the input signal.

(a) Make sure line voltage appears across the A-C LINE terminals on the terminal blocks in the case and chassis.

(b) Disconnect instrument power and turn the balancing motor pinion to determine if the motor is free to turn.

(c) Measure the resistance of the motor windings. The amplifier winding and the line winding should be about 500 ohms each.

(d) If checks (a) through (c) show proper connections and function, the trouble may be in the amplifier. Refer to the amplifier service section and troubleshoot the amplifier.

(2) Instrument is driving against a stop.

(a) Disconnect the primary element and make test connections as described in the section on calibrating the instrument.

(b) If the instrument responds to the millivolt source, check the primary element and its associated circuitry. The element may be open or shorted, or the stray level may exceed instrument specifications.

(c) If the instrument does not respond to the millivolt source, make the following checks:

1. Check continuity of input wiring between input terminal panel and measuring circuit panel.
2. Check output of constant voltage circuit.
3. Check measuring circuit.
4. Check amplifier.

Note. Specific checkout procedures for the measuring circuit, constant voltage circuit, and the amplifier circuit are given in their respective service sections.

(3) Instrument is erratic.

(a) Check the primary element for an intermittent open and for transient stray signals which exceed instrument specifications.

(b) Shake the input wires while observing instrument performance to see if an intermittent open or short can be found.

(c) Check all electrical connections.

(d) Inspect the slidewire as described in this section.

(4) Instrument is insensitive.

(a) Make sure gearing and cabling of balance system are free.

(b) Check amplifier.

(5) Calibration has shifted radically.

(a) Make sure zero and span adjustments are set correctly.

(b) Check output of constant voltage circuit.

(c) Check measuring circuit.

Ref. Dwg. 715003

INSTRUMENT SERVICE

## 1. GENERAL

This section includes procedures for the isolation of malfunctions by performance symptoms, for the isolation of defective components by voltage and resistance checks, and for the disassembly, reassembly, and adjustment of the instrument to correct for a malfunction. Wiring diagrams and check point location diagrams are included in this section.

## 2. TROUBLESHOOTING PROCEDURE

The servicing procedures are intended to permit maximum analysis with minimum equipment and minimum downtime. The following approach is used:

**a.** Identify the malfunction in terms of instrument performance and locate the trouble under Symptomatic Analysis.

**b.** Follow the procedures to isolate the faulty component.

**c.** Replace a faulty component whenever possible.

**d.** Separate sections include troubleshooting procedures for placing some defective components back in operation.

## 3. SYMPTOMATIC ANALYSIS

### a. NO DRIVE

(1) Make sure the instrument and its various assemblies are being supplied with power. Check the amplifier fuse first; then switch the instrument power on and check for 120 V ac at the following locations:

(a) At the power terminals (F and G) on the chassis terminal block.

(b) Between the a-c line hot and neutral terminals on the constant voltage unit, mounted in the lower right-hand corner of the case.

(c) Between the white and black leads on the quick-connect amplifier plug.

(2) Check that the cable drive system is free to move. Turn off instrument power and rotate the drive gear to position the indicator at 50% full scale.

(3) Turn the instrument power on. If the indicator does not move the condition of "No Drive" has been verified. If the indicator moves to either end of scale refer to the symptom "Drives Against Stop".

(4) Remove the signal input connections from terminals J and H on the measuring circuit panel. Be sure terminal D is connected to an adequate ground. Use a multimeter to check the continuity across the input terminals. During this test the multimeter is applying a voltage to

the instrument; if this causes the balancing motor to drive, the trouble is probably external to the recorder. Check the goniometer and its wiring.

(5) If the motor does not drive in step (4), connect the multimeter across the input terminals of the amplifier. If this causes the motor to drive the trouble is probably in the measuring circuit (this includes the slidewire); check these components.

(6) If the motor fails to drive in step (5), use a second multimeter to check the voltage across the windings of the balancing motor. The voltage across the winding terminals on the chassis terminal block (see schematic) may be analyzed as follows:

(a) If the control winding voltage is in the order of 300 to 400 v dc, the control winding of the balancing motor is probably open.

(b) If the control winding voltage is less than 50 v ac, the amplifier may be defective; if the voltage is almost zero, however, the control winding of the balancing motor is probably shorted.

(c) If the line winding voltage is approximately line voltage, the line winding of the balancing motor is probably open.

NOTE: If a second multimeter is not available a flashlight dry cell can be connected across the input terminals to provide a drive signal.

(7) Replace the suspected component if a spare is available.

**b. DRIVES AGAINST A STOP**

(1) Disconnect the signal input and connect a multimeter across the input terminals, J and S. If the instrument does not respond reverse the multimeter connections.

(2) If the instrument responds in step 1 to either condition:

(a) Check the signal input and its associated circuitry.

(b) Check slidewire and contactors for dirt, misalignment, or excessive wear.

(c) Check continuity of slidewire at measuring circuit connections.

(d) Check output of constant voltage unit.

(e) Check measuring circuit resistances.

(f) Check amplifier by substitution.

**c. JUMPY**

(1) Shake the various internal input wires, while observing instrument performance, to see if an intermittent open circuit can be found. Also check the primary element and associated external wiring for an open circuit. Check for transient stray signals which may exceed the instrument specifications.

(2) Check all connections to the amplifier and power assembly circuits, the measuring circuit unit, the constant voltage unit, the chassis terminal block and the slidewire.

(3) Check the slidewire contactors for excessive wear, incorrect tension or misalignment; check the slidewire for dirt or wear.

**d. INSTRUMENT IS INSENSITIVE**

(1) Check amplifier sensitivity setting.

(2) Check shield connections and reference wiring (if applicable).

(3) Verify that magnitude of transverse stray does not exceed the span in millivolts.

(4) Make sure gearing and cabling of balance system are free to move.

(5) Check amplifier (by substitution if a spare is available).

**e. CALIBRATION HAS SHIFTED RADICALLY**

(1) Make sure no one has tampered with zero or span adjustments.

(2) Check output of constant voltage unit.

(3) Stray signal at input terminals should not exceed values specified in d. (3) above.

(4) Check that drive cable is securely attached to indicator assembly.

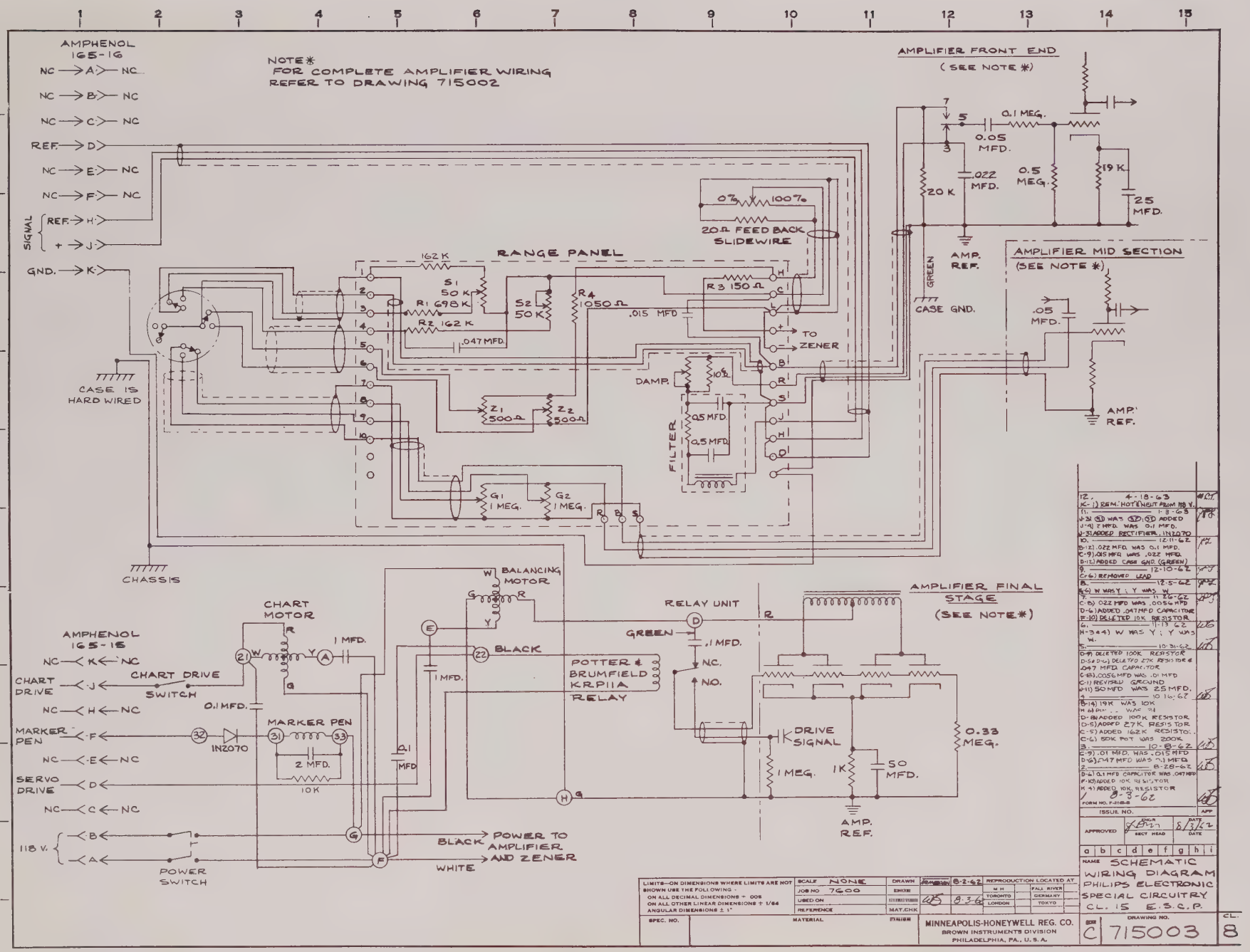


| | |
|---|---|
| NAME | SCHEMATIC WIRING DIAGRAM PHILIPS ELECTRONIC SPECIAL CIRCUITRY CL. 15 E.S.C.P. |
| DRAWING NO. | C 715003 |
| CL. | 8 |
| SCALE | NONE |
| JOB NO | 7600 |
| DRAWN | 8-2-62 |
| MINNEAPOLIS-HONEYWELL REG. CO. | BROWN INSTRUMENTS DIVISION PHILADELPHIA, PA., U.S.A. |

## 1. CALIBRATION

Check instrument calibration periodically, as described below, and make any necessary adjustments.

### a. Test Connections

(1) Disconnect the leads of the primary element from the instrument + and - input terminals.

(2) Either a precision voltage source (Type B Rubicon potentiometer) or a portable potentiometer (model 2720 or 1117 or equivalent) may be used to check calibration.

(3) For millivolt or Radiamatic* unit actuations, connect the copper leads from the voltage source to the instrument + and - terminals; observe proper polarity.

(4) For thermocouple actuations, two alternate methods of checking calibration may be used. Highest accuracy will be obtained if a precision voltage source is used in conjunction with an ice bath. However, reasonable accuracy can be obtained without the ice bath. The input voltage used in the calibration procedure must be obtained from a table of temperature-emf equivalents (reference 0°C or 32°F) for the specific type of thermocouple employed.

(a) Reference temperature = 0°C.

(1) Connect the copper leads from the voltage source to a pair of compensated leads (thermocouple extension wire).

(2) Connect the compensated leads to the instrument + and - input terminals. Observe proper polarity.

(3) Immerse each junction of a copper lead and a compensated lead in a separate melting ice bath; allow the junction temperature to stabilize at 0°C (32°F).

(4) Determine the voltage source values from a table of temperature -emf equivalents (reference 0°C, 32°F) for the type of thermocouple for which the instrument is calibrated.



*Trademark - Minneapolis-Honeywell Regulator Co.

(b) Reference temperature = ambient.

(1) Connect the copper leads of the precision voltage source directly to the instrument + and - input terminals; observe proper polarity.

(2) Use an accurate thermometer to measure the temperature at the reference junction in the instrument.

(3) The input voltages used in this procedure are determined by subtracting the emf equivalent of the reference junction temperature from the emf equivalent of the required scale readings.

**b. Amplifier Sensitivity.** The amplifier sensitivity adjustment (gain) is located on the amplifier unit. Check sensitivity, and adjust if necessary, as described in the amplifier service section.

**c. Damping**

(1) Set the pen or indicator at midscale and apply a step change of at least 10 per cent of full scale; observe response.

(2) The damping adjustment is located on the measuring circuit panel; if adjustment is required refer to the measuring circuit service section.

(3) Recheck amplifier sensitivity setting.

**d. Zero**

(1) Set the voltage source to the voltage equivalent of the cardinal point nearest 10 per cent.

(2) If the instrument does not balance at the desired cardinal point, reset the slidewire zero adjustment located on the measuring circuit panel.

**e. Span**

(1) Set the voltage source to the voltage equivalent of the cardinal point nearest 90 per cent.

(2) If the instrument does not balance at the desired cardinal point, reset the instrument span adjustment located on the measuring circuit panel.

(3) If necessary, repeat zero and span adjustments until satisfactory calibration is obtained.

**CALIBRATION** **SERVICE**

## 1. TEST CONNECTIONS

**a.** Check calibration with a portable potentiometer (Rubicon Series 2700 or equivalent).

**b.** This instrument is supplied with an uncompensated (millivolt) actuation; use copper leads between the plus (+) and minus (-) terminals on the calibrated voltage source, and the 14-point terminal block mounted on the back of the instrument case. Connect the negative lead to terminal 13; connect the positive lead to terminal 14.

## 2. DRIVE SYSTEM

**a.** Recalibration of the instrument may require the replacement of the drive cable or the drive gear stop.

**b.** Detailed instructions for drive system adjustments are included with the separate instruction manual supplied with this instrument.

## 3. AMPLIFIER SENSITIVITY

**a.** Place the pen in contact with the chart.

**b.** Switch on both the chart drive and the instrument power; allow the instrument to warm up for at least 30 minutes.

**c.** Apply a calibrated input voltage which will drive the indicator to the midscale position.

**d.** Manually turn the drive gear or otherwise move the indicator upscale more than 1% full scale; allow the indicator to return to balance and note this position.

**e.** Manually turn the drive gear or otherwise move the indicator downscale more than 1% full scale; allow the indicator to return to balance and note this position.

**f.** If the difference in indicator positions is greater than 0.25% full scale, increase the instrument sensitivity by turning the gain adjustor clockwise; the adjustment is on the upper surface of the amplifier.

**g.** Repeat steps d, e, and f until the difference in indicator positions is within instrument specifications.

**h.** It may be necessary to make minor adjustments to the gain setting when changing the instrument span.

## 4. DAMPING

**a.** The instrument is supplied with variable damping. Balance the indicator at mid-scale, then apply a step change of at least 10% full scale.

**b.** Adjust the damping potentiometer on the measuring circuit panel until the instrument comes to balance in the shortest amount of time without objectionable overshooting of the balance position. Turn the adjustor clockwise to reduce overshoot; counterclockwise to reduce the damping action.

## 5. ZERO

**a.** Apply a calibrated voltage to balance the indicator at the cardinal point nearest 10% full scale.

**b.** If the instrument does not balance at the desired point, adjust the slidewire zero setting as follows:

(1) Remove the two screws which secure the upper and lower sections of the slidewire compartment.

(2) Loosen the knurled knob on the slidewire compartment and raise the upper section to gain access to the slidewire mounting screws and the mechanical zero adjustor.

(3) Loosen, but do not remove, the four screws which secure the slidewire assembly to the slidewire housing.

(4) Use the zero adjustor, an eccentric screw located at the center of the slidewire assembly, to move the slidewire to the left or to the right; this will correct for a high or low reading, respectively.

(5) Tighten the slidewire mounting screws; be careful not to change the slidewire position.

(6) Reassemble the slidewire compartment.

## 6. SPAN

**a.** Adjust the instrument span for the 0 to 10 mv span, then repeat the procedure for the 0 to 5 mv span.

**b.** Apply a calibrated voltage equivalent to 90% full scale.

**c.** If the instrument does not balance at the selected point, adjust the instrument span as follows:

(1) The span adjustor is on a separate panel in the lower left-hand corner of the instrument case.

(2) Loosen the locking nut on the span adjustor and use a screwdriver to rotate the shaft until the instrument reading is appropriate for the applied input voltage.

(3) Tighten the locknut on the adjustor shaft.

**d.** Check the instrument calibration at several other cardinal points; if necessary, repeat the zero and span adjustments until satisfactory calibration is obtained.

## 7. DISC INTEGRATOR

**a.** The instrument calibration procedure described above is completely independent of the integration feature.

**b.** The integrator unit is factory calibrated and need not be adjusted. Calibration of the integrator operation pen is described fully in a separate instruction manual supplied with this instrument.

## 1. TEST CONNECTIONS

a. Check calibration with a portable potentiometer (Rubicon Series 2700 or equivalent).

b. Instrument actuation is uncompensated; connect copper leads from calibrated voltage source to plus (+) and minus (-) terminals on input terminal block. If instrument has an optional microphone input connector; use a similar arrangement for calibration. Observe proper polarity.

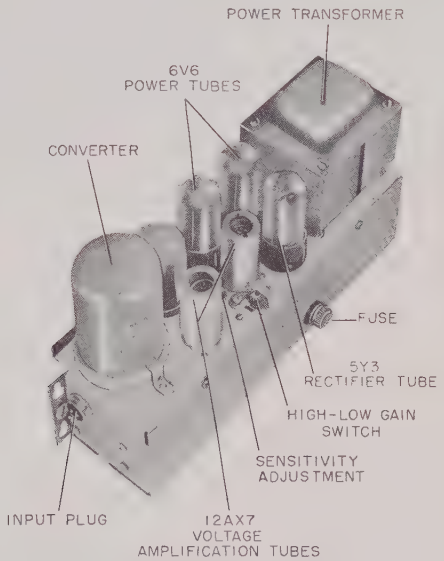


Figure 1. Amplifier Assembly

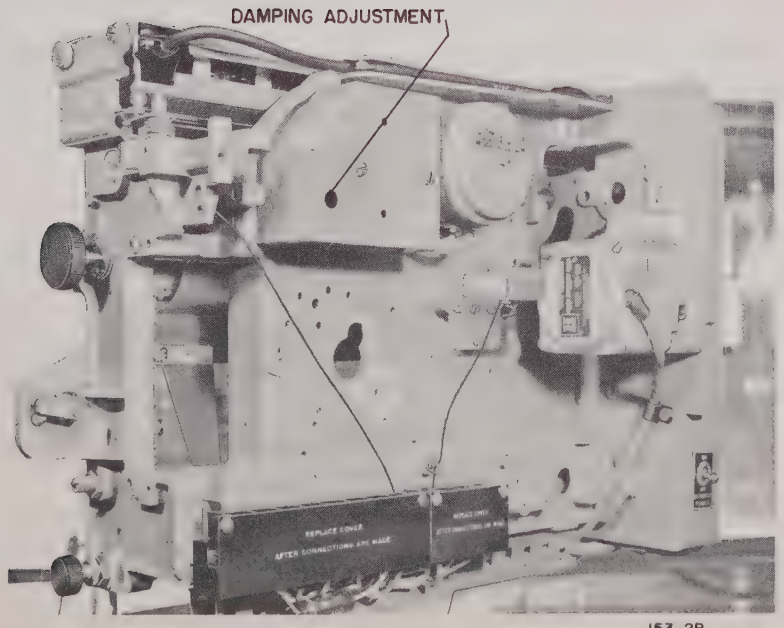


Figure 2. Rear of Chassis Assembly

## 2. PERFORMANCE CHECKS

**a. AMPLIFIER SENSITIVITY AND DAMPING.** The high speed performance of this instrument makes the amplifier sensitivity and damping adjustments both critical and interdependent; refer to Figures 1 and 2 and adjust as follows:

(1) Using an insulated screwdriver, turn the damping adjustment (fig. 2) to minimum.

(2) Place amplifier sensitivity coarse adjustor in the LOW position.

(3) Using the calibrated voltage source, apply a voltage equal to half instrument span.

(4) Increase amplifier sensitivity gradually until balancing motor begins to oscillate, then reduce sensitivity until oscillation almost stops.

NOTE: If balancing motor shaft does not oscillate with fine sensitivity set at maximum, move pen carriage slightly and release it. If oscillation occurs, reduce sensitivity until oscillation almost stops.

(5) If balance motor does not oscillate in step (4), set fine sensitivity at minimum, place coarse sensitivity switch in the HIGH position, and repeat step (4).

(6) Increase damping signal gradually until oscillation just stops.

(7) Check operation by applying a 30 per cent full scale step change, first in one direction then the other. If needed, readjust sensitivity and damping until performance is satisfactory.

**b. SLIDEWIRE ZERO**

(1) Apply a voltage equivalent to the cardinal point nearest 10% fullscale.

(2) If instrument does not balance at selected point, open slidewire compartment (Figure 3) and adjust slidewire zero setting as follows:

(a) Loosen four slidewire mounting screws.

(b) Turn zero adjustor and move slidewire to right or left.

(c) Tighten slidewire mounting screws and close compartment.

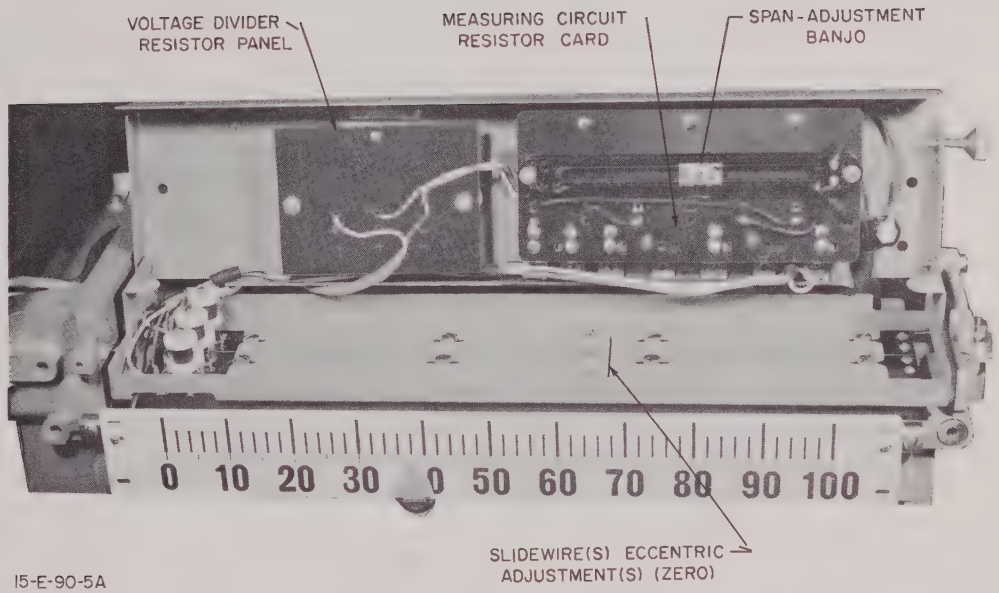


Figure 3. Open Slidewire Compartment

**c. SPAN**

(1) Apply a voltage equivalent to cardinal point nearest 90% fullscale.

(2) If instrument does not balance at selected point, open slidewire compartment and adjust instrument span as follows:

(a) Loosen locking screw on span adjustment slider.

(b) Move slider slong resistance wire until instrument balances at selected point.

(c) Tighten locking screw.

(3) Check calibration at several other cardinal points.

(4) If needed, repeat zero and span adjustments until calibration is satisfactory.

## DRIVE CABLE — SERVICE

### 1. REMOVAL

a. Swing chassis out of case and remove gear housing cover plate from left-hand side casting.

b. Turn balancing motor pinion clockwise until drive gear hits limit stop.

c. Loosen, but do not remove, cable clamp screws.

NOTE: If the instrument has auxiliary switches, loosen knurled nut which clamps actuating cams, turn cam until one of the holes is in line with the screws in the drive cable clamp. Cable clamp can then be loosened without removing cam.

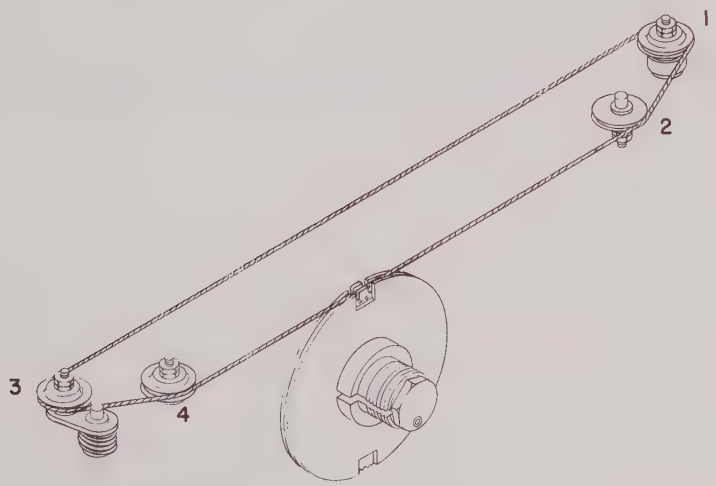


36-E-16-1B

d. Loosen carriage clamp screws and free cable.

e. Press cable tension pulley (3) inward and lift cable off both this pulley and guide pulley (4) adjacent to it.

f. Remove end of drive cable from outer slot in cable clamp.

g. Pass cable around pulleys (1 and 2) and remove other end of cable from cable clamp.

h. Remove cable carefully; avoid kinking.

### 2. INSTALLATION

a. Turn balancing motor pinion counterclockwise until drive gear hits limit stop.

**b.** Place one end of drive cable in inner slot of cable clamp so that cable extends through slot toward left-hand side casting. Pass cable around guide pulleys (1 and 2) and under carriage clamps; do not clamp cable in place.

**c.** Pass cable around guide pulley (4) but not around cable tension pulley (3).

**d.** Insert free end of cable in outer slot of cable clamp.

**e.** Press cable tension pulley in and slip cable into position on that pulley.

**f.** Tighten screws on cable clamp.

**g.** Tighten clamps on indicator carriage. Check carriage alignment and instrument calibration before placing instrument back in service.

**DRIVE CABLE** **SERVICE**

## 1. REMOVAL

### a. PURPLE PEN.

(1) Position carriage assembly at 100% of scale, and secure cable drive drum in this position. (Drum position is important for correct installation.)

(2) Remove retaining screw and free cable from slot in cap (9, Figure 1).

(3) Pass cable around pulleys (8), (7), (6), and (5).

(4) Free cable from carriage cable clamps.

(5) Pass cable around pulleys (4), (3) and (2); then free cable from slot in drive drum (1).

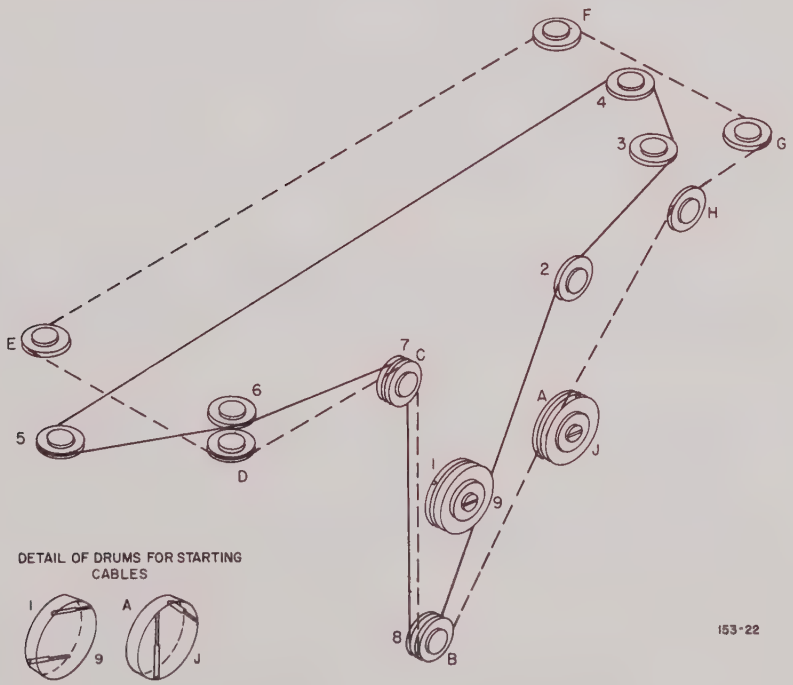


Figure 1. Cable Installation

### b. RED PEN

(1) Position carriage assembly at 0% full scale, and secure cable drive drum in this position. (Drum position is important for correct installation.)

(2) Remove retaining screw and free cable from slot in cap (J, Figure 1)

(3) Pass cable around pulleys (B), (C), and (D).

(4) Free cable from carriage cable clamps.

(5) Pass cable around pulleys (E), (F), (G) and (H); then free cable from slot in drive drum (A).

## 2. INSTALLATION

### a. RED PEN

(1) Be sure cable drive drum is secured and orientation is as shown in Figure 1.

(2) Place cable in slot of drive drum (A); with cable extending upward, wrap 2-1/4 turns counterclockwise.

(3) Pass cable around pulleys (B), (C), (D), and (E).

(4) Pass cable through left-hand casting, around pulleys (F) and (G), and then to back of center casting.

(5) Pass cable around pulley (H) and place cable in slot in cable drum cap (J).

(6) Mount cap in position but do not tighten retaining screw. Turn cap counterclockwise to take up slack until pin is in center of slotted bracket on take-up pulley (F). Tighten cap retaining screw.

(7) Place carriage assembly at 100% of scale and clamp cable to carriage.

(8) Release drive drum and check for full scale pen travel before placing instrument back in operation.

### b. PURPLE PEN.

(1) Be sure cable drive drum is secured and orientation is as shown in figure 1.

(2) Place cable in slot of drive drum (1); with cable extending to the right, wrap 2 turns counterclockwise.

(3) Pass cable around pulleys (2) and (3).

(4) Pass cable through left-hand casting, around pulley (4) across front of chassis and around pulleys (5), (6), (7), and (8).

(5) Place cable in slot in cable drum cap (9).

(6) Mount cap in position but do not tighten retaining screw. Turn cap counterclockwise to take up slack until pin is in center of slotted bracket on take-up pulley (5). Tighten cap retaining screw.

(7) Place carriage assembly at 0% of scale and clamp cable to carriage.

(8) Release drive drum and check for full scale pen travel before placing instrument back in operation.

**DRIVE CABLES** **SERVICE**

## 1. REMOVAL (EITHER CABLE)

a. Swing chassis out of case and remove gear housing cover plate from left-hand side casting.

b. Turn appropriate balancing motor pinion clockwise until drive gear hits limit stop.

c. Loosen, but do not remove, cable clamp screws on drive gear cable drum (1 or 2).

d. Loosen screws in appropriate indicator carriage cable clamps and free cable from clamps.

e. Press cable tension pulley (7 or 10) inward and lift cable off both this pulley and the adjacent guide pulley.

f. Remove end of drive cable from outer slot in cable clamp on drive gear cable drum.

g. Pass cable around other guide pulleys and remove other end of cable from clamp on drive gear cable drum.

h. Remove cable carefully; avoid kinking.

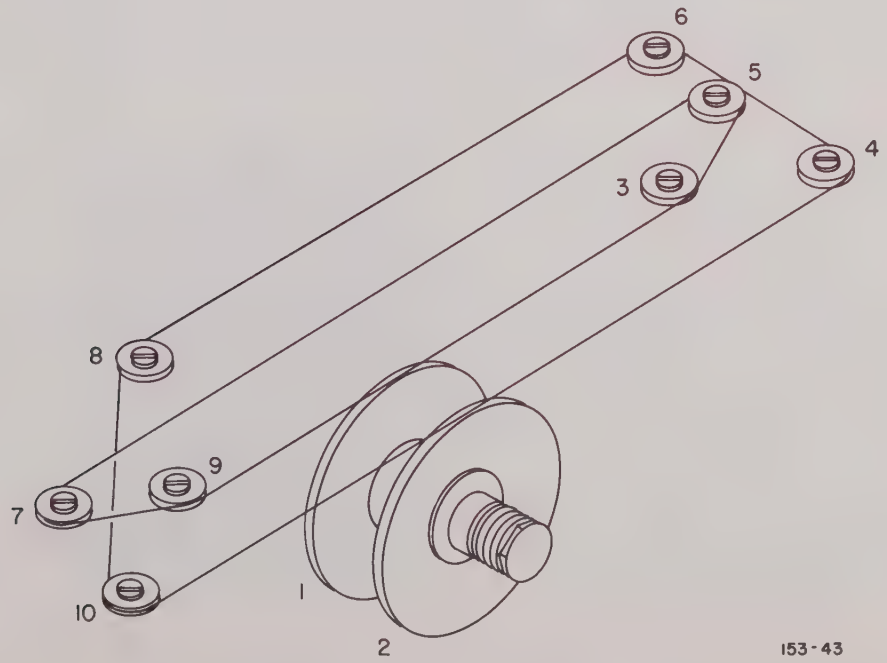


Figure 1. Drive Cable Installation

615-0040-153

## 2. INSTALLATION (REAR PEN)

a. Turn inner drive gear (1) clockwise until it hits limit stop. Place one end of drive cable in inner slot of cable clamp on drive gear cable drum. Extend cable through slot toward left-hand casting.

b. Hold cable taut and turn drive gear counterclockwise to other limit stop. Route cable over guide pulleys (3 and 5).

c. Route cable toward right-hand casting, pass around tension pulley (7), and over guide pulley (9).

d. Route cable to cable drive drum, relieve cable tension (press tension pulley inward), and insert loose end of cable in outer slot of drum clamp.

e. Restore cable tension and tighten cable drum clamps. Turn drive gear clockwise to other limit stop.

f. Set pen carriage at 100% full scale and clamp to cable. Check that pen carriage moves through proper travel when bull gear is rotated manually from 100% stop to 0% stop.

## 3. INSTALLATION (FRONT PEN)

a. Turn outer drive gear (2) counterclockwise until it hits limit stop.

b. Place one end of drive cable in inner slot of drive drum-cable clamp.

c. Wrap cable one turn clockwise around cable drum; be sure cable is in slot.

d. Route cable toward left-hand casting, and pass around guide pulleys (4 and 6).

e. Route cable toward right-hand casting and pass around guide pulley (8).

f. Route cable to back of chassis and around tension pulley (10). Route cable to outer slot on cable drive drum. Relieve cable tension (press tension pulley inward) and insert loose end of cable in outer clamp of drum.

g. Restore cable tension and tighten cable drum clamps. Turn drive gear clockwise to other limit stop.

h. Set pen carriage at 100% full scale and clamp to cable. Check that pen carriage moves through proper travel when bull gear is rotated manually from 100% stop to 0% stop.

**DRIVE CABLE** **SERVICE**

## 1. REMOVAL

a. Swing out chassis.

b. Loosen the drive cable clamp on the drive gear cable drum.

NOTE: If the instrument has cam-operated switches on the rear of chassis, loosen the knurled nut which clamps the switch operating cam and rotate the cam until one of the holes lines up with the screw in the drive cable clamp. The cable clamp can then be loosened without removal of the cam by inserting a screwdriver through the hole in the cam.

c. Hold the top section of the slidewire cable drum and remove the cable drum screw.

d. Remove drive cable carefully; avoid kinking.

## 2. INSTALLATION (Part No. 76571 locking key from accessory kit required)

a. Manually turn the motor pinion counterclockwise until the stop on the large drive gear is against the motor pinion.

b. Remove the cover from the helical slidewire.

c. Turn the slidewire cable drum until the contactor is in the top convolution and the hole in the slidewire shaft lines up with the hole in the casting. Lock the slidewire in this position by inserting the locking pin through the holes in the chassis and shaft (see Figure 1).

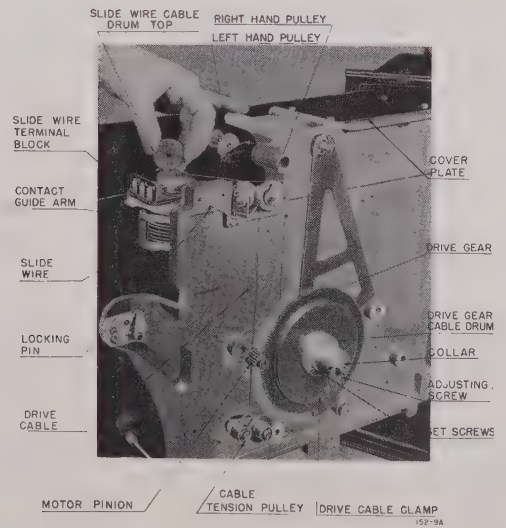


Figure 1. Rear of Chassis, Circular Chart Recorder

615-0041-152

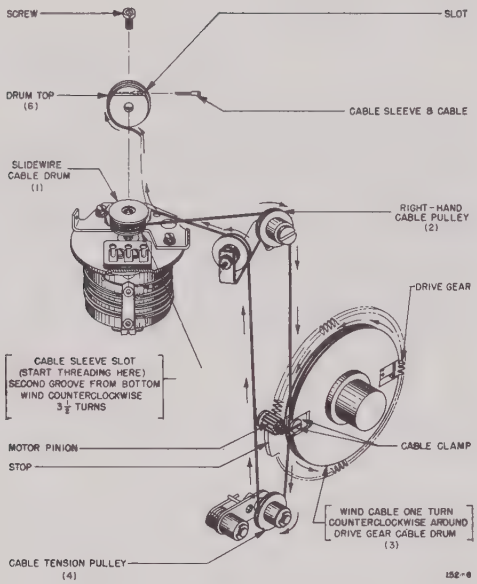


Figure 2. Drive Cable Installation

d. Refer to figure 2. Place one end of the cable in the slot in the bottom of the slidewire cable drum. The cable sleeve should extend toward the rear of the chassis and the cable should extend through the slot toward the front of the chassis.

e. Draw the cable through the slot until the cable sleeve catches in it.

f. Starting in the second groove from the bottom, wind the cable 3-1/2 times counterclockwise around the slidewire cable drum (1). Then pass the cable around the guide pulley (2) and continue the cable down to the drive gear cable drum (3) and clamp it in place.

g. Wind the cable one turn counterclockwise around the drive gear cable drum. Pass the cable around the cable tension pulley (4), (1/2 turn clockwise) up over the other guide pulley (5), and into the groove of the slidewire cable drum top (6) in a counterclockwise direction.

h. Place the cable in the slot of the drum top and draw it into the slot until the cable sleeve catches.

i. Assemble the slidewire cable drum top to the cable drum and insert the cable drum screw. (Do not tighten screw).

j. Rotate the cable drum top counterclockwise until the cable tension pulley (4) is halfway between its mechanical stops, then tighten the cable drum screw.

k. Remove the locking pin and turn the motor pinion slowly to check the operation of the cable in the slidewire cable drum.

l. Check instrument calibration, and reset control devices before placing instrument back in service.

## RANGE SELECTOR DRIVE CABLE — SERVICE

### 1. REMOVAL

a. Set range indicator carriage to zero position as follows:

(1) Swing chassis out of case and remove gear housing cover plate from left-hand side casting.

(2) Jumper sensing element input terminals.

(3) Turn on instrument power until range indicator carriage reaches the zero position, then switch off power and remove jumper.

b. Open slidewire housing.

c. Loosen, but do not remove, two cable clamp locking screws on range indicator carriage. Free cable from clamps.

d. Loosen screw on cable drum cap, keeping cable drum against stop. Allow cap to rotate to relieve tension in drive cable; remove cap.

e. Remove cable from retaining slot in cap.

f. Remove cable from guide pulleys on left and right-hand side castings.

g. Remove cable from retaining slot in cable drum. Avoid kinking cable.

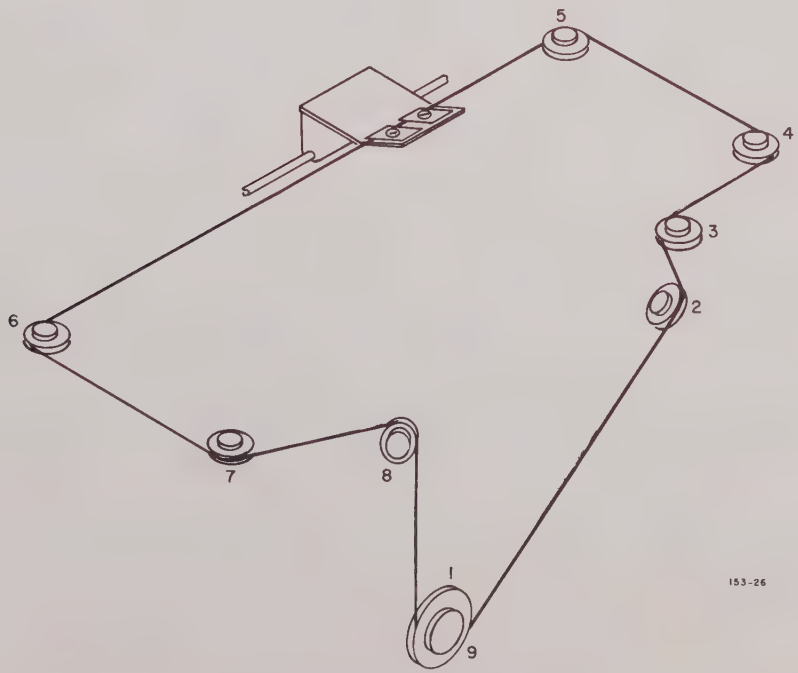


Figure 1. Cable installation diagram.

## 2. INSTALLATION

a. Place cable end in cable drum retaining slot. Wind 4-1/2 turns on cable drum, in counterclockwise direction (ccw). Keep cable drum against stop.

b. Pass cable around pulley (2) and pulley (3) (quarter turn ccw).

c. Pass cable around pulleys (4) and (5) (quarter turn ccw), place cable in clamps on indicator carriage, but do not secure cable.

d. Pass cable around pulleys (6) and (7).

e. Place cable in retaining slot on cap (9) and install cap.

f. Turn cap ccw to remove slack; tighten locking screw.

g. Secure cable in range indicator carriage clamp.

h. Replace gear housing cover plate and close slidewire housing.

i. Check carriage alignment and instrument calibration before placing in operation.

ALIGNMENT SERVICE

## 1. ALIGNMENT CHECK

a. Check alignment of indication system and adjust (if necessary) at the side of the chart which has round holes. In the following steps it is assumed that round holes are on right-hand side of chart and elongated holes (for humidity compensation) are on the left.

b. With chart installed, manually move indicator carriage to right-hand limit (turn drive gear or equivalent). Indicating pointer should line up with extreme right-hand scale graduation, or with another appropriate chart graduation if instrument is equipped with a right-hand event marker pen.

c. On single record instruments, record should coincide with appropriate chart graduation. On multirecord instruments, vertical line of + symbol should print on appropriate chart graduation.

d. On two pen instruments repeat alignment check for red pen.

## 2. CARRIAGE ALIGNMENT

a. Loosen knurled nut on right-hand side of slidewire housing and swing housing open.

b. Loosen carriage clamps and re-position indicator carriage as required.

c. Be sure cable is in cable clamp slot, tighten clamp, and close slidewire housing.

d. On two pen instruments repeat carriage alignment, if necessary, for red pen.

## 3. SCALE ALIGNMENT

a. Move indicator carriage to extreme right-hand limit.

b. Loosen screws which secure scale and shift scale until appropriate graduation lines up with pointer; tighten screws.

c. Move indicator carriage to extreme left-hand limit. Appropriate scale graduation should line up with pointer within 0.01 inch. Record may, or may not, coincide with chart graduation depending on ambient humidity conditions.

d. On two pen instrument align scale with purple pointer, then align red pointer with scale, (loosen two screws, shift red pointer, retighten screws).

# STRAY ELECTRICAL CURRENTS

SERVICE

## 1. GENERAL

**a.** Shifts in calibration, lack of sensitivity, and general erratic operation of the instrument that cannot be traced to other causes (see other service sections in this manual) are probably due to the presence of stray electric currents circulating in the sensing and measuring circuits as a result of external influences, e.g., electric fields.

**b.** This section contains checks for d-c and a-c stray and measures for eliminating or minimizing their effect.

NOTE: Stray currents are more likely to be a source of trouble in high temperature applications (1500°F, or higher) where sources of current are involved or where the sensing element and connecting wires are close to heavy electrical apparatus.

**c.** When checking for stray currents, the instrument should be connected for normal operation and the measured medium should be at the desired operating level.

## 2. DIRECT-CURRENT STRAY

**a.** D-C stray can be remedied only by eliminating multiple ground or common points, since only one such point can be tolerated. Check for multiple ground or common points as follows:

(1) Eliminate any known paths between the instrument and true ground.

(2) With the sensing element connected to the instrument (but isolated from true ground), measure the d-c resistance between each of the input terminals and true ground.

**b.** Open circuit indicates that there is no conductance path for d-c stray through any critical portion of the input or the measuring circuit.

**c.** If less than 10 megohms is indicated, check the input and measuring circuits individually for poor insulation.

## 3. ALTERNATING-CURRENT STRAY

**a.** Check for a-c stray by comparing operation of the instrument with thermocouple connected with operation of the instrument connected to a portable potentiometer. Any change in calibration or sensitivity, increase in deadband or offset between the two checks indicates the presence of a-c stray.

**b.** If operating the instrument at true ground potential and the presence of a-c stray was indicated in step a, above, proceed as follows:

(1) Connect a high-impedance voltmeter between either of the thermocouple terminals and ground. Use the "output" range or connect a 1.0 microfarad capacitor in series with the a-c range to eliminate the effect of d-c voltage in the measurement.

(2) No readable meter deflection should occur. A readable deflection verifies the presence of a-c stray.

**c.** If the above checks indicate the presence of a-c stray, its effect may be eliminated or minimized by connecting the (+) or (-) input terminal of the instrument to instrument ground or shield ("S") terminal as described below.

## 4. CONNECTIONS

**a.** The specific connection is determined by the magnitude of the stray to ground signal with respect to instrument span, the magnitude and distribution of customer's source impedance, and the location of stray signal injection by the customer's source. In general, the "S" terminal should be connected to the primary element circuit lead which has the lowest impedance to ground (fig. 1) to prevent passing current through the higher source impedance.

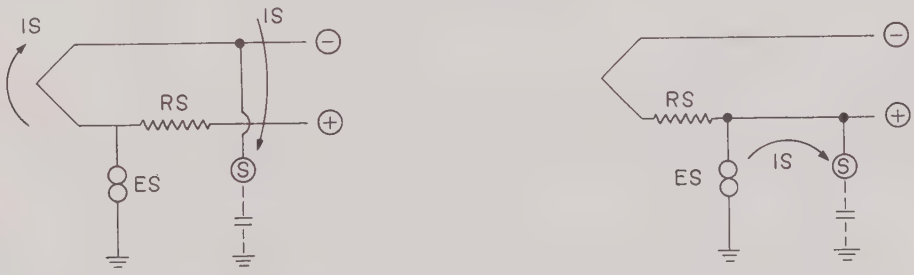


Figure 1. Typical Shield Connections

**b.** In fig. 2, various types of primary element circuits have been reduced to equivalent source circuits with distribution of source impedance and points where customer's source might possibly be grounded. Determine an equivalent circuit for the primary element circuit and connect the "S" terminal according to data contained in table 1.

## CALIBRATION CONNECTIONS SERVICE

### 1. PRELIMINARY PROCEDURES

#### a. SINGLE-POINT INSTRUMENTS

(1) Without checking terminals: Disconnect leads of primary element from plus (+) and minus (-) terminals on measuring circuit panel.

(2) With checking terminals: Disconnect shorting bar between instrument plus terminal (INSTR) and thermocouple plus terminal (TC) on instrument door.

#### b. MULTIPOINT INSTRUMENTS

(1) On all multipoint instruments, including Universal type, remove connections between measuring circuit panel and multipoint input terminal panel. Calibration is same as for single-point instrument with connections made directly to measuring circuit panel.

(2) On two pen instruments the entire calibration procedure must be repeated for each measuring circuit.

### 2. TEST CONNECTIONS

a. For millivolt, Radiamatic* unit, and other uncompensated actuations, connect copper leads from the precision voltage source (Honeywell Series 2700 or equivalent) to the instrument input terminals (figure 1).

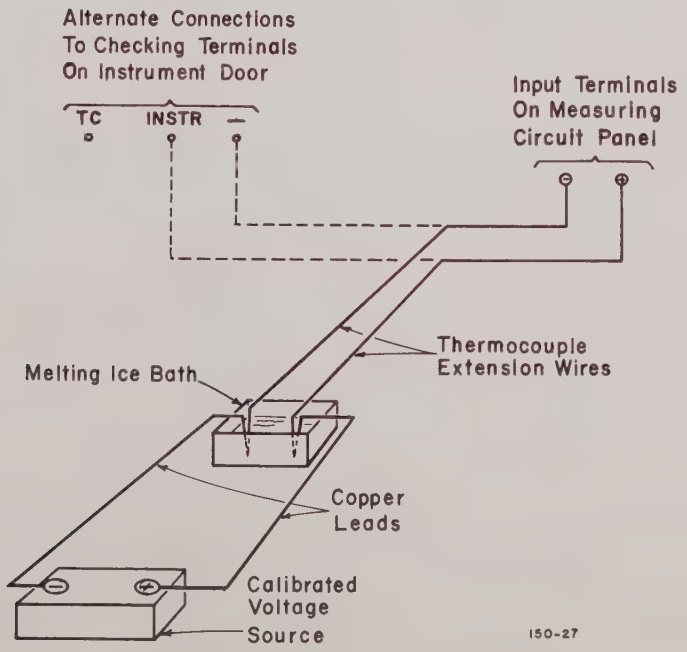


Figure 1. Test Connections

* Honeywell Trademark

**b.** For thermocouple (compensated) actuations you can use either of two methods to check calibration. While highest accuracy will be obtained by using the calibrated voltage source in conjunction with an ice bath, you can get reasonable accuracy without the ice bath.

(1) Ice Bath Method

(a) Connect copper leads from voltage source to a pair of thermocouple extension wires.

(b) Connect extension wires to instrument input terminals. Observe proper polarity.

(c) Immerse each junction of a copper lead and an extension wire in a melting ice bath; keep the junctions electrically insulated from each other and from the bath. Allow the junctions to stabilize at 0°C (32°F). Bath should be stirred for highest accuracy.

(d) Determine input voltages directly from a table of temperature-emf equivalents (reference 0°C or 32°F) for the specific type of thermocouple.

(2) Without Ice Bath

(a) Connect copper leads between precision voltage source and instrument input terminals. Observe proper polarity.

(b) Use a mercury thermometer to determine temperature at reference junction in instrument.

(c) Determine input voltages by algebraic addition of emf equivalents for the reference junction temperature and for the required scale readings.

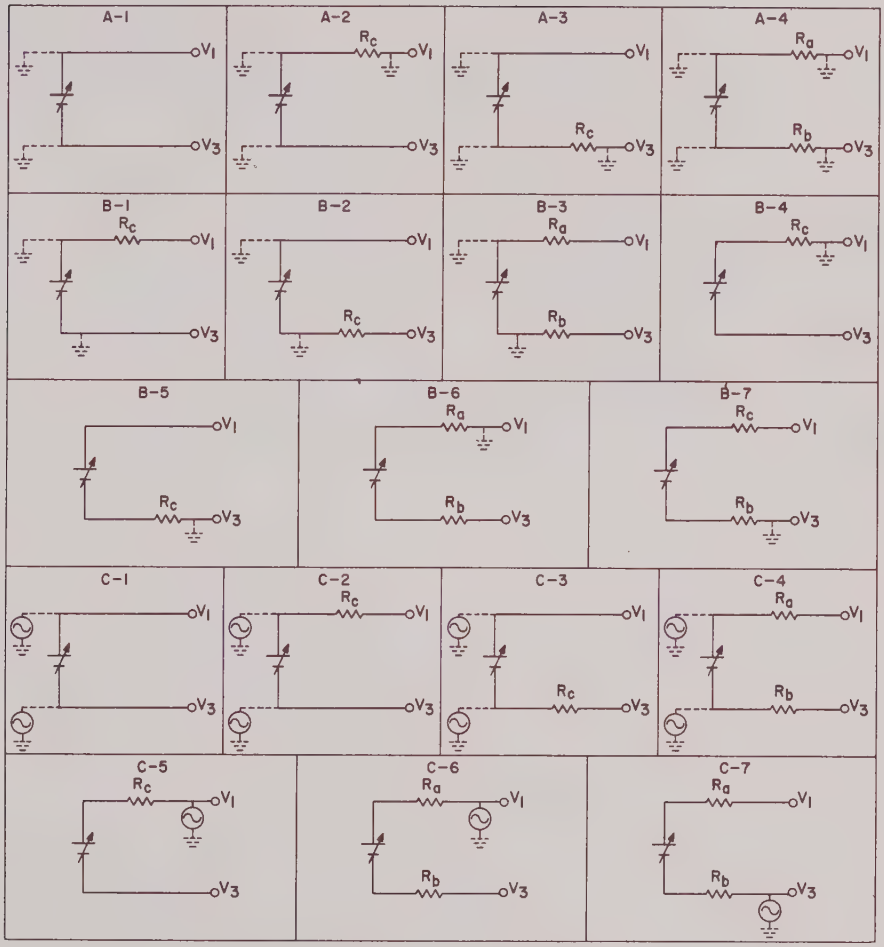


150-17

*Legend of Symbols*

| | |
|---|---|
| | Variable Voltage, no a-c source to ground |
| | Variable Voltage, a-c source to ground |
| $R_c$ | Customer's total source impedance or resistance, unilateral distribution |
| $R_a + R_b$ | Equal to ($R_C$) customer's total source impedance or resistance. $R_a$ and $R_b$ may be equal or unequal. Equal distribution is of greatest significance in equivalent circuit $C_4$ |
| $V_1$ and $V_3$ | Instrument terminals, $V_1$ (+); $V_3$ (−) |

Figure 2 Equivalent Source Circuits, schematic diagram.

TABLE I

SHIELD CONNECTIONS FOR EQUIVALENT SOURCE CIRCUITS

| Magnitude of Stray to Ground | Total Source Impedance ($R_c$) | General Category | Specific Case | Shield Connection |
|---|---|---|---|---|
| Less than 1 volt per millivolt of span | Less than 1000 ohms | Type A circuits | All type A circuits | Connect shield to terminal $V_3$ |
| | 1000 to 25000 ohms | Type B circuits | $B_1$, $B_5$, $B_7$; also $B_3$ if $R_a$ is equal to or much greater than $R_b$ | Connect shield to terminal $V_3$ |
| | | | $B_2$, $B_4$, $B_6$; also $B_3$ if $R_b$ is greater than $R_a$ | Connect shield to terminal $V_1$ |
| Greater than 1 volt per millivolt of span | 0 to 25000 ohms | Type C circuits | $C_1$, $C_2$, $C_7$; also $C_4$ if $R_b$ is less than 100 ohms and if $R_b$ is less than $R_a$ | Connect slidewire housing to instrument shield. Connect shield to terminal $V_3$. Place high voltage warning sticker on instrument door. |
| | | | $C_3$, $C_5$, $C_6$; also $C_4$ if $R_b$ is less than 100 ohms and if $R_a$ is less than $R_b$ | Connect slidewire housing to instrument shield. Connect shield to terminal $V_1$. Place high voltage warning sticker on instrument door. |
| | | | $C_4$ if both $R_a$ and $R_b$ are high (above 100 ohms) | Enclose the input leads in a shielded cable and connect the shield lead to the SHIELD connection on the terminal panel. Place high voltage warning sticker on instrument door. |

**CALIBRATION** **SERVICE**

## 1. TEST CONNECTIONS

**a.** Resistance thermometer actuations require a precision decade resistance box for checking calibration.

**b.** Disconnect resistance bulb(s):

(1) On all single-record instruments disconnect the resistance bulb leads from the A, B, and C terminals on the measuring circuit panel.

(2) On all multirecord instruments, including the Universal type, remove the connections between the measuring circuit and the multipoint input terminal panels. Test connections can then be made directly to the measuring circuit panel and the instrument can be calibrated as a single-record instrument.

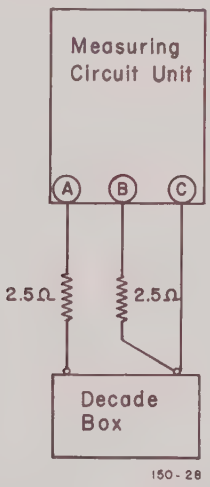


Figure 1. Test Connections.

**c.** Make test connections (Fig. 1):

(1) Connect a copper wire in series with a 2.5 ohm resistor from terminal A on the instrument to either terminal on the decade box.

(2) Connect a copper wire in series with a 2.5 ohm resistor to terminal B, and an independent copper wire to terminal C on the instrument, connect both wires to the other terminal on the decade box.

**d.** Check calibration by measuring resistance required to obtain balance at each major graduation.

**e.** On two pen instruments the calibration procedure must be repeated for each pen circuit.

**MEASURING CIRCUIT** **SERVICE**

## 1. TEST SETUP

### a. General

(1) To check calibration, use an adjustable current source with a range of 0-20 milliamperes and sufficient adjustability to permit convenient and accurate settings of cardinal check points at high and low ends of the instrument scale. The current source must have connections for the insertion of a standard resistor in series with the measuring circuit being tested.

(2) To measure current applied to the instrument measuring circuit by the potential drop method, i.e., in terms of voltage, connect a portable potentiometer across the standard resistor. To avoid changing the voltage range of the portable potentiometer and thus maintain the same degree of accuracy for measuring high and low values of applied current, use two standard resistors as indicated below.

| Applied Current | Standard Resistor | Equivalent Voltage Drop |
|---|---|---|
| 4 ma (low end) | 10 Ω ±0.05% or better | 40 millivolts |
| 20 ma (high end) | 1 Ω ±0.05% or better | 20 millivolts |

**b. Single Record Instruments.** Connect current source to instrument as shown in figure 1. Observe proper polarity.

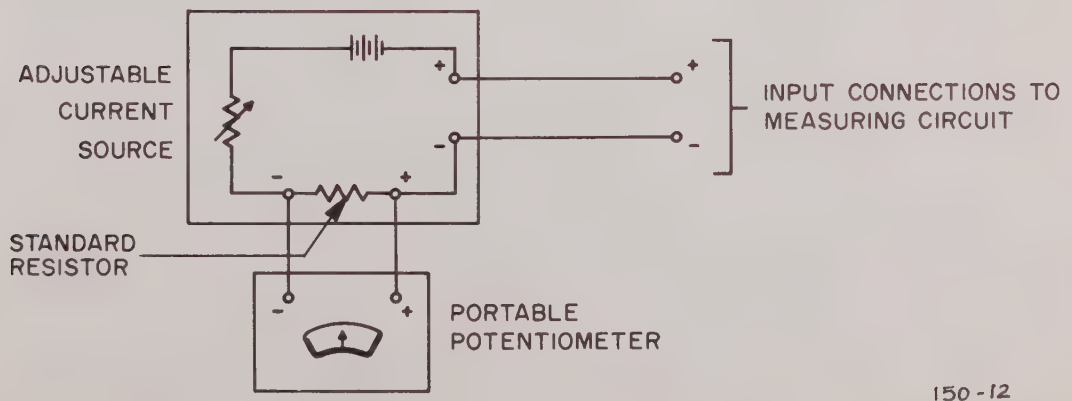


Figure 1. Test Setup

### c. Multirecord Instruments

(1) Multirecord instruments have individual shunt resistors, one connected across each pair of input terminals at customer's terminal board. Connect current source to any convenient pair of these terminals but NOT directly to input terminals on the measuring circuit unit.

(2) For the following checks, it is more convenient to operate the instrument as an indicator than to use the printed record of the selected point. Some instruments are not wired for operation as an indicator, i.e., the balancing motor does not remain energized when the chart drive motor switch is thrown to OFF. To make the instrument operate as an indicator, refer to the instrument operation section and make the simple wiring change described there.

(3) Throw chart drive switch to OFF after selector switch reaches point selected for calibration check but before wheel drops to print.

## 2. CALIBRATION CHECKS

### a. Zero

(1) With 10-ohm standard resistor connected in test circuit, check instrument calibration at 10 per cent of full scale by applying 5.6 milliamperes. Equivalent voltage drop equals 56 millivolts (5.6 ma X 10 ohms).

(2) If instrument does not balance at selected point, adjust slidewire zero setting as follows:

(a) Straight Slidewire

(1) Remove two screws which connect upper and lower sections of slidewire compartment.

(2) Loosen four slidewire mounting screws.

(3) If instrument reading is too high or too low, turn adjustor to move slidewire to the left or to the right respectively.

(4) Tighten slidewire mounting screws and reassemble slidewire compartment.

(b) Helical Slidewire

(1) Remove cover from slidewire assembly.

(2) Loosen clamping screw on contact guide arm.

(3) Turn adjusting screw to move contact guide arm clockwise to correct for a high reading; counterclockwise to correct for a low reading.

(4) Tighten clamping screw and replace slidewire cover.

**b. Span**

(1) Substitute 1-ohm standard resistor for 10-ohm standard resistor.

(2) Check calibration at 90 per cent of full scale by applying 18.4 millivolts (18.4 ma X 1 ohm).

(3) If instrument does not balance at selected point, adjust span as follows:

(a) Loosen locking screw on span adjustment slider.

(b) Move slider along resistance wire until instrument balances at selected point.

(c) Tighten locking screw. Recheck balance point.

(d) Check calibration at several other cardinal points. If necessary, repeat zero and span adjustments until satisfactory calibration is obtained.

## 3. DAMPING

**a.** Turning the rheostat counterclockwise increases the time constant of the damping circuit and overdamps the response of the indicator carriage. Clockwise adjustment underdamps this response.

**b.** If the instrument is excessively overdamped, the indicator carriage will be sluggish in approaching the balance point. Excessive underdamping causes overshoot. Adjust as follows:

(1) Introduce an input change:

(a) Electrically, by connecting adjustable current source to input terminals, as shown in figure 1, then varying current to change position of indicator carriage.

(b) Mechanically, by deenergizing recorder, rotating large gear on rear of chassis to position indicator carriage, and re-energizing recorder.

(2) Observe rebalancing action; adjust damping rheostat for desired response.

NOTE: Slight underdamping is usually recommended.

# SERVICE

CONSTANT VOLTAGE UNIT

## 1. OUTPUT VOLTAGE CHECK

**a.** Disconnect the output of the Constant Voltage Unit from the measuring circuit.

**b.** Use either a decade box or connect two dummy resistors, R1 and R2, (± 0.1 per cent tolerance) in series across the output terminals to form a voltage divider as shown in figure 1. Use two part number 76098-999-resistance value manganin resistors. The sum of the two resistances must equal the load resistance of the measuring circuit with which the Constant Voltage Unit is used. The value of resistor R2 must be small enough so that the voltage across it can be measured with a portable potentiometer. Select the values for R1 and R2 from figure 1.

**c.** Measure the voltage across resistor R2 with a portable potentiometer (Model 1117, 126W3V or 2720) or, for more accurate measurement, use a precision laboratory type potentiometer such as a Rubicon Type B.

**d.** If the proper voltage (per fig. 1) is not obtained from the Constant Voltage Unit, remove the cover and check the seal on the rheostat shaft. If the seal is broken, readjust the rheostat until the correct voltage is obtained. If the seal is intact, service the unit as described below.

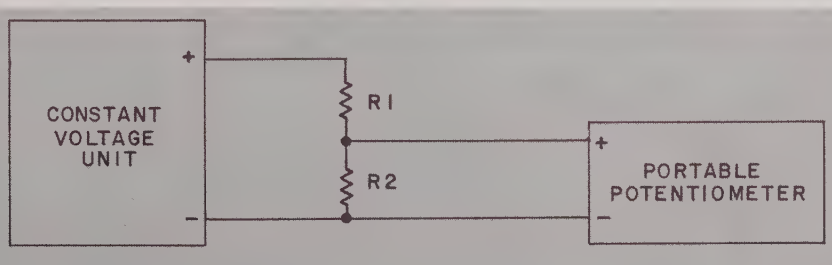


| C. V. U. MODEL NO. | FREQUENCY (cps) | CURRENT (ma) | VOLTAGE | LOAD (ohms) | DUMMY LOAD (ohms) | | VOLTAGE ACROSS R2 (mv) |
|---|---|---|---|---|---|---|---|
| | | | | | R1 | R2 | |
| 365389-1 | 50/60 | 6 | 1.029 | 171.5 | 161.5 | 10 | 60 |
| 365389-2 | 50/60 | 8 | 1.029 | 128.6 | 121.1 | 7.5 | 60 |
| 365389-3 | 50/60 | 6 | 4.200 | 700 | 690 | 10 | 60 |
| 365389-4 | 25 | 6 | 1.029 | 171.5 | 161.5 | 10 | 60 |
| 365389-5 | 25 | 8 | 1.029 | 128.6 | 121.1 | 7.5 | 60 |
| 365389-6 | 25 | 6 | 4.200 | 700 | 690 | 10 | 60 |
| 365389-7 | 50/60 | 6 | 1.029 | 171.5 | 161.5 | 10 | 60 |

32-E-65-1

Figure 1. Connections for output voltage check.

## 2. SERVICE

An inoperative or malfunctioning Constant Voltage Unit should be replaced. Since it may be necessary, however, to service this unit in the field, voltage and resistance values are given below.

### a. Voltage Checks

(1) Connect the unit as described in paragraph 1 above.

(2) Approximate voltage checks can be made from the primary of the transformer up to and including EZ2, using a multimeter. Points A, B, C; D, and E are located physically in figure 2 and schematically in figure 3.

(3) Voltages should be in accordance with Table I.

TABLE I

VOLTAGE VALUES

| Measurement | Voltage |
|---|---|
| Supply Voltage | 120 vac |
| A to B | 48 vac |
| C to B | 50 vdc |
| D to B | 14 vdc |
| E to B | 7 vdc |

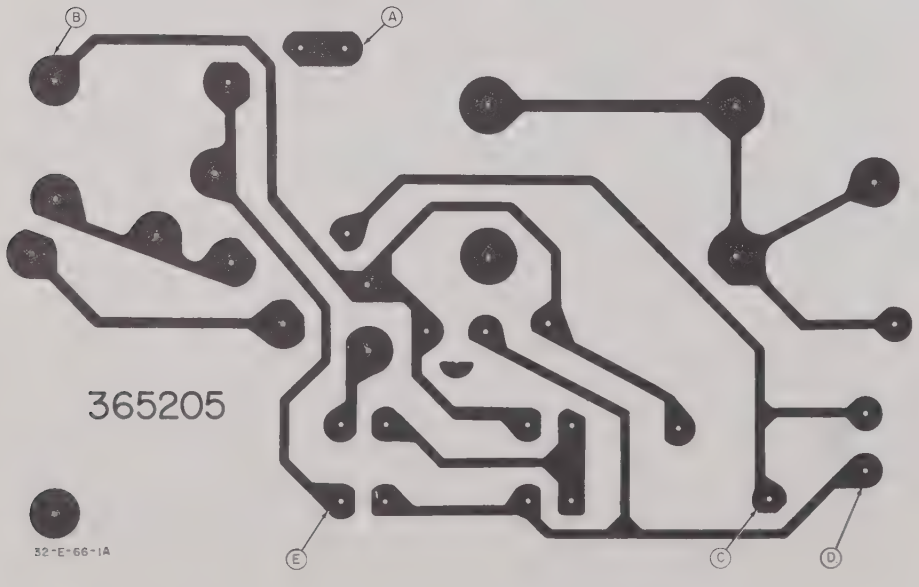


Figure 2. Printed wiring board diagram, showing test point locations.

**b. Resistance Checks**

(1) Disconnect supply voltage.

(2) Discharge capacitor Cs.

(3) Use a multimeter to check resistances; values should be as specified in Table II.

TABLE II

COMPONENT VALUES

| Constant Voltage Unit | R1 (ohms) | R2 (ohms) | R3 (ohms) | Ra (ohms) | Cs (mfd) |
|---|---|---|---|---|---|
| 365389 - 1 & -4 | 500 | 20K | 200 | 1700 | .047 |
| 365389 - 2 & -5 | 450 | 20K | 222 | 1525 | .047 |
| 365389 - 3 & -6 | 500 | 20K | 200 | 1700 | .047 |
| 365389 - 7 | 500 | 20K | 200 | 1700 | - |

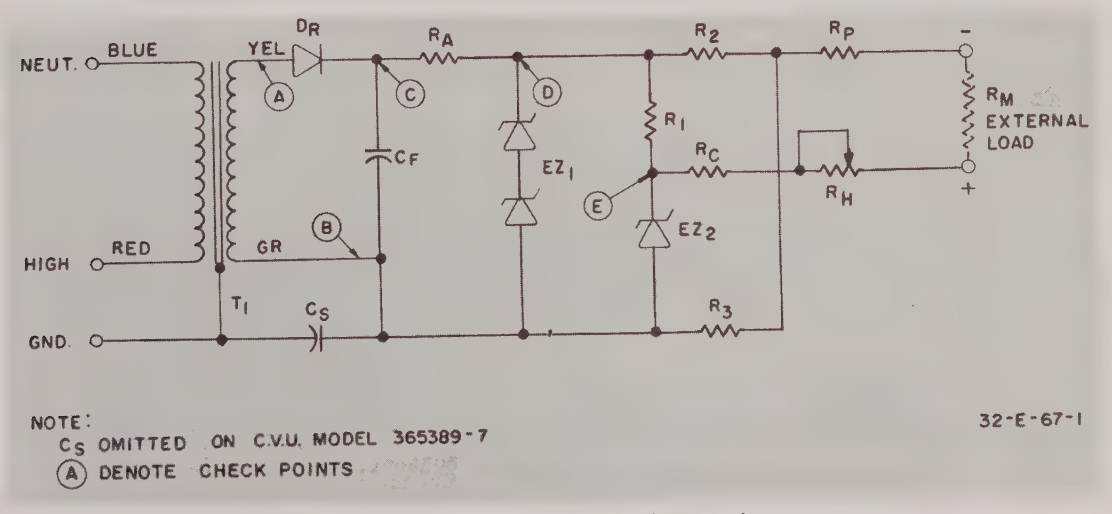


Figure 3. Constant Voltage Unit, schematic diagram.

## 1. AMPLIFIER GAIN (SENSITIVITY)

a. Switch on power, and operate instrument as an indicator. Permit normal instrument warmup.

b. Apply an input potential to drive indicator to mid-scale position.

c. Manually turn drive gear (or equivalent) to move indicator upscale more than 1% full scale. Allow indicator to return to balance point slowly and note this position.

d. Cause indicator to move downscale more than 1% full scale. Allow indicator to return to balance point slowly and note this position.

e. If the difference in indicator positions exceeds the instrument rating, increase instrument sensitivity by clockwise rotation of the gain adjustor (on upper surface of amplifier). If motor oscillation occurs, reduce gain slightly.

f. Repeat steps c, d, and e until difference in indicator positions (deadband) is within instrument specifications.

## 2. DAMPING

a. Set the indicator at mid-scale and apply a step change of at least 10% full scale.

b. Set the damping adjustment, on the measuring circuit panel, for instrument balance in shortest time without excessive overshooting of balance position. Turn adjustor clockwise to reduce overshoot, counterclockwise to reduce damping action.

c. On mixture consistency recorders a slightly overdamped response is desirable.

## 3. ZERO

a. **GENERAL.** Set voltage source to emf equivalent for major graduation nearest 10% full scale. If instrument does not balance at selected point adjust zero using method appropriate for instrument design.

b. **ELECTRICAL ZERO ADJUSTMENT.** If the measuring circuit design includes an electrical zero adjustor:

(1) Loosen retaining screws and remove measuring circuit cover.

(2) If instrument reading is too high or too low, turn adjustor clockwise or counterclockwise respectively.

(3) Replace cover and tighten screws.

**c. MECHANICAL ZERO ADJUSTMENT.**

(1) Instruments with straight slidewire:

(a) Remove two screws which connect upper and lower sections of slidewire compartment.

(b) Loosen knurled knob on slidewire housing and raise upper section to gain access to slidewire mounting screws and zero adjustor.

(c) Loosen four slidewire mounting screws.

(d) If instrument reading is too high or too low, turn adjustor to move slidewire to the left or to the right respectively.

(e) Tighten slidewire mounting screws and reassemble slidewire compartment.

(2) Instruments with helical slidewire:

(a) Remove cover from slidewire assembly.

(b) Loosen clamping screw on contact guide arm.

(c) Turn adjusting screw to move contact guide arm clockwise to correct for a high reading; counterclockwise to correct for a low reading.

(d) Tighten clamping screw and replace slidewire cover.

## 4. SPAN

**a.** Set voltage source to emf equivalent for major graduation nearest 90% full scale.

**b.** If instrument does not balance at selected point, use adjustment on measuring circuit panel to adjust instrument span.

(1) Loosen locking screw and move slider along resistance wire.

(2) Tighten slider locking screw and check instrument reading.

(3) Repeat steps (1) and (2) until instrument reading is appropriate for applied input voltage. Do not retighten locking screw after correct instrument reading is obtained.

(4) Check calibration at several other major graduations.

(5) If necessary, repeat zero and span adjustments until calibration is satisfactory.

## 1. AMPLIFIER GAIN (SENSITIVITY)

a. Switch on power, and operate instrument as an indicator. Permit normal instrument warmup.

b. Apply an input potential to drive indicator to mid-scale position.

c. Manually turn drive gear (or equivalent) to move indicator upscale more than 1% full scale. Allow indicator to return to balance point slowly and note this position.

d. Cause indicator to move downscale more than 1% full scale. Allow indicator to return to balance point slowly and note this position.

e. If the difference in indicator positions exceeds the instrument rating, increase instrument sensitivity by clockwise rotation of the gain adjustor (on upper surface of amplifier). If motor oscillation occurs, reduce gain slightly.

f. Repeat steps c, d, and e until difference in indicator positions (deadband) is within instrument specifications.

## 2. ZERO

a. **GENERAL.** Set voltage source to emf equivalent for major graduation nearest 10% full scale. If instrument does not balance at selected point adjust zero using method appropriate for instrument design.

b. **ELECTRICAL ZERO ADJUSTMENT.** If the measuring circuit design includes an electrical zero adjustor:

(1) Loosen retaining screws and remove measuring circuit cover.

(2) If instrument reading is too high or too low, turn adjustor clockwise or counterclockwise respectively.

(3) Replace cover and tighten screws.

c. **MECHANICAL ZERO ADJUSTMENT.**

(1) Instruments with straight slidewire:

(a) Remove two screws which connect upper and lower sections of slidewire compartment.

(b) Loosen knurled knob on slidewire housing and raise upper section to gain access to slidewire mounting screws and zero adjustor.

(c) Loosen four slidewire mounting screws.

(d) If instrument reading is too high or too low, turn adjustor to move slidewire to the left or to the right respectively.

(e) Tighten slidewire mounting screws and reassemble slidewire compartment.

(2) Instruments with helical slidewire:

(a) Remove cover from slidewire assembly.

(b) Loosen clamping screw on contact guide arm.

(c) Turn adjusting screw to move contact guide arm clockwise to correct for a high reading; counterclockwise to correct for a low reading.

(d) Tighten clamping screw and replace slidewire cover.

## 3. SPAN

**a.** Set voltage source to emf equivalent for major graduation nearest 90% full scale.

**b.** If instrument does not balance at selected point, use adjustment on measuring circuit panel to adjust instrument span.

(1) Loosen locking screw and move slider along resistance wire.

(2) Tighten slider locking screw and check instrument reading.

(3) Repeat steps (1) and (2) until instrument reading is appropriate for applied input voltage. Do not retighten locking screw after correct instrument reading is obtained.

(4) Check calibration at several other major graduations.

(5) If necessary, repeat zero and span adjustments until calibration is satisfactory.

## 1. RANGE CHANGE

**a. GENERAL.** A total range change feature makes measuring circuit range changing quick and easy. The range card (measuring circuit resistor card, fig. 1) can be removed as a calibrated unit and replaced by another with only a screwdriver. Proceed as follows:

(1) Open the slidewire compartment cover and remove the screw under each end and open cover assembly.

(2) Loosen screws which retain range card.

(3) Remove range card and install replacement by reversing steps (2) and (1).

(4) Check calibration.

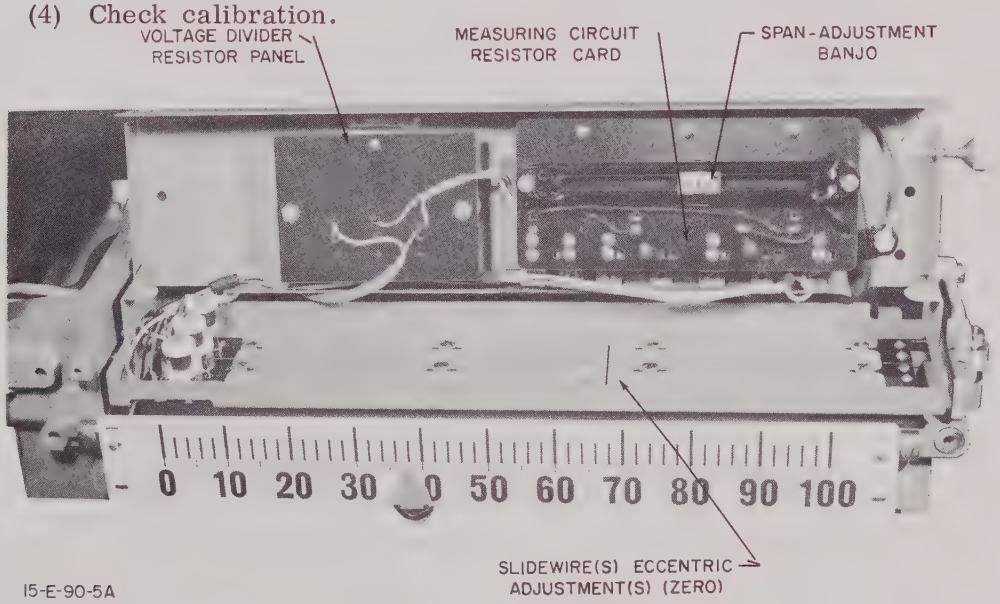


Figure 1. Open Slidewire Compartment

**b. RANGE CHANGE CARDS.** These (Part No. 362972-999) may be ordered for the following standard ranges. Note that minimum span is 10.0 millivolts.

- 5.0 to +5.0
- 1.0 to +10.0
- 0.5 to +10.5
  0 to 10
  0 to 20
- 2.5 to +25.0
- 5.0 to +50.0
  0 to 50.0

## 2. RESISTOR CALCULATIONS

For convenience, formulae for calculating resistance values for various millivolt ranges are given below. The following abbreviations are used.

$MV_S$ = Millivolt Span

$MV_{min}$ = Millivolts suppression for millivolts input (millivolt input for zero per cent of scale).

Refer to the measuring circuit schematic included in this manual. The following values are fixed:

| | | |
|---|---|---|
| Shunted slidewire, $R_{SW}$ | = | 300.0 ohms |
| Span adjustment, $R_{SA}$ | = | 8.0 ohms |
| Current through lower branch of bridge network, $I_a$ | = | 0.35 ma |
| Current through upper branch of bridge network, $I_c$ | = | 0.15 ma |
| Voltage from CVU ($V_{ab}$) across measuring circuit | = | 1.019 volts |
| Cold junction resistor, $R_{RJ}$ | = | 66.67 ohms |
| Current limiting resistor, $R_C$ | = | 6727.0 ohms |

Calculations are based on 2% overtravel at each end of the slidewire. Adjust all resistor values to within ±0.05%.

Lower Suppression Resistor - $R_O$ = $$\frac{10 + MV_{min} - 0.02\ MV_S}{0.35}$$

Span Resistor - $R_T$ = $$\frac{304.72\ MV_S}{100.96 - MV_S}$$

Current Limiting Resistor - $R_A$ = $$2882.85 - \frac{1}{0.35}\ (1.036\ MV_S + MV_{min})$$

Check: $$R_O + \frac{304.72\ R_T}{304.72 + R_T} + R_A = 3/7\ (R_{RJ} + R_C)$$

**MEASURING CIRCUIT** **SERVICE**

## 1. RESISTOR CALCULATIONS

**a. GENERAL.** To change the range of temperature measurement, the values of wire-wound resistors M, N, and P must be changed. Formulae for calculating new values for these resistors are given below. The following abbreviations are used.

X min = Resistance of temperature bulb at low limit of new temperature range

X max = Resistance of temperature bulb at high limit of new temperature range

$$M = \frac{X\ max + X\ min}{2}$$

$$N = \frac{9.615M + 9.808\ X\ min - .192\ X\ max + 48.077}{X\ max - X\ min} - .02$$

$$P = 9.615 \left[ \frac{(X\ min + 2.5)\ (M + X\ max + 5)}{(M + 2.5)\ \ (X\ max - X\ min)} \right] - .212$$

Check formula: $(M + 2.5)\ (P + 9.808) = (X\ max + 2.5)\ (N + .192)$

**b. LOCATION.** To locate resistors M, N, and P, refer to illustrations in the measuring circuit description section.

**MEASURING CIRCUIT** **SERVICE**

## 1. RANGE CHANGE

**a. GENERAL.** The measuring circuit design permits quick and easy changing of the instrument range. The range resistor panel and the reference spool panel can each be removed and replaced by panels for a different range or actuation. A screwdriver is the only tool required for this conversion. Make conversion as follows:

(1) Loosen the screws which retain the panels

(2) Remove panels and install replacements; tighten screws

(3) Check calibration.

**b. KITS.** Range change kits are available; order kit number 919H11. Refer to instrument nameplate and specify:

(1) Instrument model number

(2) Instrument serial number

(3) Frequency of voltage supply

(4) Present range and actuation

(5) Desired range and actuation

(6) Chart and scale (if required)

**c. ACTUATION** If both the actuation and range are being changed, select the appropriate reference junction spool, for the new actuation from Table 2.

**d. BURNOUT.** If the measuring circuit design includes resistor burnout, select new Rfus from Table 4.

## 2. RESISTOR CALCULATIONS

This paragraph describes how the resistor values for the measuring circuit are calculated according to the range, span, and type of input being used. This information is included to supplement the measuring circuit schematic diagram.

**a. FORMULAS**

$$Ro = \frac{Ic\ Rrj + MVmin - MVc - A\ MVs - E}{Ia}$$

$$Rt = \frac{B\ MVs}{C - MVs}$$

$$Ra = \frac{Ic \times 509.5 + MVc - MVmin - D\ MVs}{Ia}$$

$$R4 = 509.5$$

**b. NOMENCLATURE**

Ia = Current through upper branch of measuring circuit. See Table 1.

A, B, C, D, E, = Constants per Table 1.

Ic = Current through lower branch of measuring circuit. Ic = 6 ma - Ia

Rrj = resistance of reference junction compensating resistor at 75° F. See Table 2.

MVc = Millivoltage correction for 75° F Ref. See Table 2.

MVmin = Millivoltage corresponding to 0% full scale; based on reference junction at 0°.

MVmax = millivoltage corresponding to 100% full scale; based on reference junction at 0°.

MVs = Millivolt span (MVmax - MVmin).

TABLE I

CONSTANT VALUES

| Span (mv) | Ia (ma) | A | B | C | D | E |
|---|---|---|---|---|---|---|
| 0 to 40 | 4 | .021 | 20.474 | 76.923 | 1.0437 | 0 |
| 40.1 to 60 | 4 | .021 | 21.154 | 76.923 | 1.079 | 0 |
| 60.1 to 75 | 4 | .021 | 23.179 | 76.923 | 1.1844 | 0 |
| 75.1 & up* | 5.5 | .021 | 23.179 | 105.769 | 1.1844 | .0366 |

* For uncompensated ranges only.

TABLE 2

REFERENCE JUNCTION CHARACTERISTICS

| Type Couple | Part Number | Wire | Resistance in Ohms at 75° Rrj | MVc °F | MVc °C |
|---|---|---|---|---|---|
| J (I/C) | 365927-1 | Copper | 6.787 ± .014 | 2.161 | 1.2394 |
| J | 365927-8 | Copper | 6.754 ± .014 | 2.105 | 1.218 |
| K | 365927-2 | Copper | 5.255 ± .011 | 1.636 | 0.952 |
| Y | 365927-3 | Copper | 6.909 ± .014 | 2.1765 | 1.2585 |
| T | 365927-4 | Copper | 5.359 ± .011 | 1.6149 | .9441 |
| R | 365927-5 | Copper | 0.796 ± .002 | .2247 | .1357 |
| S | 365927-5 | Copper | 0.796 ± .002 | .2286 | .1366 |
| Uncomp. | 365927-6 | Manganin | 5.000 ± .010 | 0 | 0 |

TABLE 3

SPAN ADJUSTOR VALUES

| Span (mv) | Active Resistance (ohms) | Part No. |
|---|---|---|
| 1 to 20 | .66 | 363024-1 |
| 40.1 to 60 | 1.76 | 363024-4 |
| 60.1 & up | 4.67 | 363024-3 |

TABLE 4

BURNOUT RESISTOR (When Supplied)

| SPAN (MV) | Rfus | |
|---|---|---|
| | Value | Part Number |
| 10 to 20 | .82 meg | 76255-42 |
| 21 to 40 | .68 meg | 76255-48 |
| 41 and higher | .33 meg | 76255-71 |

## MEASURING CIRCUIT — SERVICE

### 1. RANGE CHANGE

**a. GENERAL.** The total range change feature makes possible quick and easy changing of the instrument range. The range panel can be removed as a calibrated unit and replaced by another panel; only a screwdriver is required for this conversion. Make conversion as follows:

(1) Loosen screws which retain range panel.

(2) Remove range panel and install replacement; tighten screws.

(3) Check calibration.

**b. KITS** Range change panels are available; order part number 366940-1. Refer to instrument nameplate and specify:

(1) Instrument model number

(2) Instrument serial number

(3) Frequency of voltage supply

(4) Present range and actuation

(5) Desired range and actuation

(6) Chart and scale (if required)

### 2. RESISTOR CALCULATIONS

This paragraph describes how the resistor values for the measuring circuit are calculated according to the range, span, and type of input being used. This information is included to supplement the measuring circuit schematic diagram which does not specify any resistance values because of the variations available.

**a. FORMULAS**

$$R1 = \frac{Ic\ Rrj + MVmin - MVc - A\ MVs}{Ia} + \frac{Rz\ Ic}{2\,Ia}$$

$$R2 = \frac{B\ \ MVs}{C - MVs}$$

$$R3 = \frac{1019 + MVc - MVmin - D\ MVs}{Ia} - \frac{Rz\ Ic}{2\,Ia}$$

$$R4 = 509.5 - Rz$$

**b. NOMENCLATURE**

Ia = Current through upper branch of measuring circuit. See Table I.

A, B, C, D = Constants per Table I

Ic = Current through lower branch of measuring circuit.
Ic = 6 ma - Ia

633-0016-150

Rrj = resistance of reference junction compensating resistor at 75° F. See Table II.

MVc = Millivoltage of thermocouple from 32° F to 75° F. See Table II.

MVmin = Millivoltage corresponding to 0% full scale; based on reference junction at 0° C.

MVmax = Millivoltage corresponding to 100% full scale; based on reference junction at 0° C.

MVs = Millivolt span (MVmax - MVmin).

Rz = Resistance of zero adjustment. See Table III.

TABLE I

CONSTANT VALUES

| Span (mv) | Ia (ma) | A | B | C | D |
|---|---|---|---|---|---|
| 0 to 40 | 4 | .021 | 20.474 | 76.923 | 1.0437 |
| 40.1 to 60 | 4 | .021 | 21.154 | 76.923 | 1.079 |
| 60.1 to 75 | 4 | .021 | 23.179 | 76.923 | 1.1844 |
| 75.1 & up* | 5.5 | .021 | 23.179 | 105.769 | 1.1844 |

* For uncompensated ranges only

TABLE II

REFERENCE JUNCTION CHARACTERISTICS

| Type Couple | Wire | Resistance in Ohms at 75°F (Rrj) | MVc °F | MVc °C |
|---|---|---|---|---|
| J (I/C) | Copper | 6.787 ± .014 | 2.161 | 1.2394 |
| J | Copper | 6.754 ± .014 | 2.105 | 1.218 |
| K | Copper | 5.255 ± .011 | 1.636 | 0.952 |
| Y | Copper | 6.909 ± .014 | 2.1765 | 1.2585 |
| T | Copper | 5.359 ± .011 | 1.6149 | .9441 |
| R | Copper | 0.796 ± .002 | .2247 | .1357 |
| S | Copper | 0.796 ± .002 | .2286 | .1366 |
| Uncomp. | Manganin | 5.000 ± .010 | 0 | 0 |

TABLE III

ZERO ADJUSTMENT VALUES

| Span (mv) | Resistance ±10% (ohms) | Part No. |
|---|---|---|
| 1 to 20 | 0.4 | 723159-2 |
| 20.1 to 40 | 1.4 | -3 |
| 40.1 to 75 | 2.7 | -4 |
| 75.1 & up | 8.8 | -6 |

TABLE IV

SPAN ADJUSTOR VALUES

| Span (mv) | Active Resistance (ohms) | Part No. |
|---|---|---|
| 2.5 to 40 | .6552 | 363024-1 |
| 40.1 to 63 | 1.7570 | -4 |
| 63.1 & up | 4.670 | -3 |

**MEASURING CIRCUIT** **SERVICE**

## 1. COMPUTATION OF SERIES RESISTOR

a. Refer to the simplified schematic diagram (fig. 1) which shows the tachometer generator, and the input resistance circuit. In order to use the formula

$$Rs = \frac{Et - IRsh}{I}$$

values are needed for Et, Rsh and I.

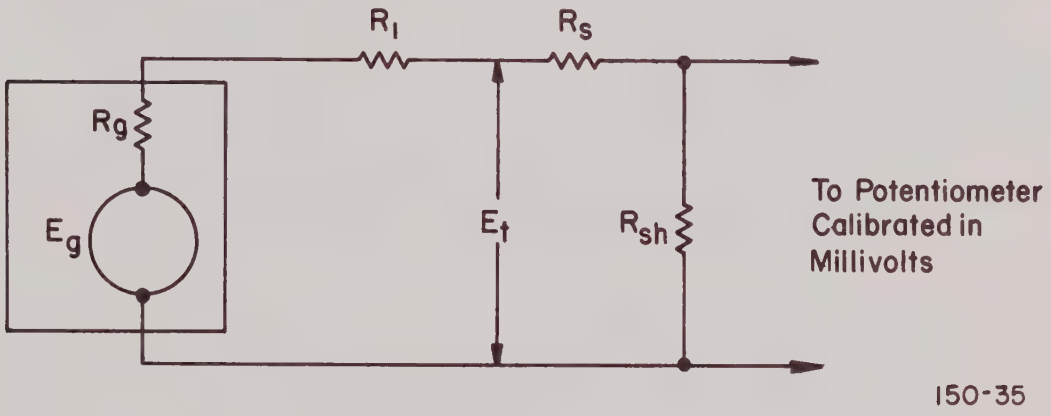


Figure 1. Schematic Diagram of tachometer generator and input resistance circuit

b. The values of Rsh and I are determined by the millivolt range of the instrument. The standard tachometer measuring circuit has a 0 to 25 millivolt range and a 10 ohm shunt (Rsh), so the current (I) required for full scale reading is .0025 amps.

$$I = \frac{\text{full scale (volts)}}{\text{Rsh (ohms)}} = \frac{.025}{10} = .0025 \text{ amps}$$

c. Et is dependent on the full scale no-load tachometer generator voltage (Eg), and the internal resistance of the generator (Rg), and the lead resistance (R1). These factors are related by:

$$Et = Eg - I (Rg + R1)$$

but R1 is usually small enough to be neglected, therefore:

$$Et = Eg - IRg$$

d. Eg depends on the ratio between the full scale speed of the process (e.g., conveyor belt) in rpm, and the generator shaft speed in rpm.

Let $A = \frac{\text{rated volts}}{\text{tach RPM}}$ = rating given for a tachometer.

$B = \frac{\text{tach RPM}}{\text{process RPM}}$ = speed ratio of tach RPM to process RPM - e.g. - gear or pulley ratio.

$C = \frac{\text{process RPM}}{\text{full scale}}$ = Maximum desired process RPM.

Then $Eg = A \times B \times C \ \frac{\text{volts}}{\text{full scale}}$

## 2. SAMPLE COMPUTATION FOR Rs

a. Assume the following:

(1) A tachometer is used which has an output voltage of 25 volts per 500 RPM $\left(A = \frac{25 \text{ volts}}{500 \text{ RPM}}\right)$

(2) The internal tachometer resistance and lead resistance is 25 ohms (Rg + R1 = 25 ohms).

(3) A conveyer speed range is 0 to 90 FPM which is equivalent to 0 to 300 RPM (C = 300 RPM/full scale)

(4) The tachometer is coupled to the conveyer by a gear train and is driven twice as fast as the conveyor $\left(B = \frac{2}{1} \ \frac{\text{tach RPM}}{\text{process RPM}}\right)$

(5) Then

$$Eg = A \times B \times C = \frac{25}{500} \times \frac{2}{1} \times 300 = \frac{30 \text{ Volts}}{\text{full scale}}$$

$$Et = Eg - I\,(Rg + R1) = 30 - .0025(25) = 29.9375 \text{ volts}$$

$$Rs = \frac{Et - IRsh}{I} = \frac{29.9375 - (.0025)(10)}{.0025} = 11{,}965 \text{ ohms.}$$

b. Using an 11,965 ohm resistor for Rs results in a 2.5 Ma current at full scale tachometer speed (600 RPM). This current through Rsh (10 ohms) produces a 25 MV drop at instrument full scale reading.

## 3. CORRECTION OF ERRORS

a. Measure an actual process speed (in rpm) and compare value with corresponding instrument reading. Determine whether instrument reading is high or low and determine magnitude of error.

b. Small errors can be eliminated by modifying the instrument calibration. Large errors will require a new value for the series resistor (Rs).

## 4. SUPPRESSED RANGES

a. Suppressed tachometer ranges can be supplied only by factory-calibrating the proper suppression in the basic instrument range.

b. For example, an instrument supplied for a range of 1000 to 2000 rpm would have a basic range of 12.5 to 25 mv. The series and shunt resistors are computed as though the range were not suppressed (0 to 2000 RPM).

## 5. DOUBLE RANGES

a. Double (non-suppressed) ranges, for example, 0 to 1000 and 0 to 2000 rpm, are feasible. Merely use two series resistors (calculated per paragraph 2) and a single-pole double-throw switch to select the desired range.

b. For each additional range, another series resistor and an additional switch position are required.

## MEASURING CIRCUIT — SERVICE

### 1. RANGE CHANGE

**a. General.** The measuring circuit design permits quick and easy changing of the instrument range. The range resistor panel and the reference spool panel can each be removed and replaced by panels for a different range or actuation. A screwdriver is the only tool required for this conversion. Make conversion as follows:

(1) Loosen the screws which retain the panels

(2) Remove panels and install replacements; tighten screws

(3) Check calibration

**b. Kits.** Range change kits are available; order kit number 919H11. Refer to instrument nameplate and specify:

(1) Instrument model number,

(2) Instrument serial number,

(3) Frequency of voltage supply,

(4) Present range and actuation,

(5) Desired range and actuation,

(6) Chart and scale (if required).

**c. Actuation.** If both the actuation and range are being changed, select the appropriate reference junction spool for the new actuation from Table 2.

**d. Burnout.** If the measuring circuit design includes resistor burnout, select new Rfus from Table 4.

### 2. RESISTOR CALCULATIONS

This paragraph describes how the resistor values for the measuring circuit are calculated according to the range, span, and type of input being used. This information is included to supplement the measuring circuit schematic diagram.

**a. Formulas**

$$Ro = \frac{Ic\ (Rrj + R6) + MVmin - MVc - A\ MVs - E}{Ia}$$

$$Rt = \frac{B\ MVs}{C - MVs}$$

$$Ra = \frac{Ic\ (R4) + MVc - MVmin - D\ MVs}{Ia}$$

$$R4 = 514.5 - R6 - Rrj$$

$$R6 = \frac{MVmin\ (range\ 2) - MVmin\ (range\ 1)}{Ic}$$

633-0023-150

## b. Nomenclature

Ia = Current through upper branch of measuring circuit. See Table 1.

A, B, C, D, E, = Constants per Table 1.

Ic = Current through lower branch of measuring circuit. Ic = 6 ma - Ia.

Rrj = Resistance of reference junction compensating resistor at 75°F. See Table 2.

MVc= Millivoltage correction for 75°F Ref. See Table 2.

MVmin = Millivoltage corresponding to 0% full scale; based on reference junction at 0°.

MVmax = Millivoltage corresponding to 100% full scale; based on reference junction at 0°.

MVs = Millivolt span (MVmax - MVmin).

TABLE I

CONSTANT VALUES

| Span (mv) | Ia (ma) | A | B | C | D | E |
|---|---|---|---|---|---|---|
| 0 to 40 | 4 | .021 | 20.474 | 76.923 | 1.0437 | 0 |
| 40.1 to 60 | 4 | .021 | 21.154 | 76.923 | 1.079 | 0 |
| 60.1 to 75 | 4 | .021 | 23.179 | 76.923 | 1.1844 | 0 |
| 75.1 & up* | 5.5 | .021 | 23.179 | 105.769 | 1.1844 | .0366 |

* For uncompensated ranges only.

TABLE 2

REFERENCE JUNCTION CHARACTERISTICS

| Type Couple | Part Number | Wire | Resistance in Ohms at 75° Rrj | MVc °F | MVc °C |
|---|---|---|---|---|---|
| J (I/C) | 365927-1 | Copper | 6.787 ± .014 | 2.161 | 1.2394 |
| J | 365927-8 | Copper | 6.754 ± .014 | 2.105 | 1.218 |
| K | 365927-2 | Copper | 5.255 ± .011 | 1.636 | 0.952 |
| Y | 365927-3 | Copper | 6.909 ± .014 | 2.1765 | 1.2585 |
| T | 365927-4 | Copper | 5.359 ± .011 | 1.6149 | .9441 |
| R | 365927-5 | Copper | 0.796 ± .002 | .2247 | .1357 |
| S | 365927-5 | Copper | 0.796 ± .002 | .2286 | .1366 |
| Uncomp. | 365927-6 | Manganin | 5.000 ± .010 | 0 | 0 |

TABLE 3

SPAN ADJUSTOR VALUES

| Span (mv) | Active Resistance (ohms) | Part No. |
|---|---|---|
| 1 to 20 | .66 | 363024-1 |
| 40.1 to 60 | 1.76 | 363024-4 |
| 60.1 & up | 4.67 | 363024-3 |

TABLE 4

BURNOUT RESISTOR (When Supplied)

| SPAN (MV) | Rfus | |
|---|---|---|
| | Value | Part Number |
| 10 to 20 | .82 meg | 76255-42 |
| 21 to 40 | .68 meg | 76255-48 |
| 41 and higher | .33 meg | 76255-71 |

# SERVICE

MEASURING CIRCUIT UNIT

## 1. ADJUSTMENTS

If calibration checks indicate that readjustment is necessary, refer to the applicable paragraph below and perform the indicated steps.

**a. Damping.** The R-C time constant of the damping network is varied by changing the resistance value. Adjust as follows:

(1) Insert a non-metallic screwdriver in the shaft of the damping potentiometer.

(a) If the instrument overshoots the balance point turn the damping adjustment clockwise until the pen approaches the balance point at its greatest rate without any overshoot.

(b) If the instrument approaches balance at too slow a speed turn the damping potentiometer counterclockwise to increase the rate of approach without causing overshoot.

(2) The sensitivity and damping adjustments are to some extent interdependent; recheck amplifier sensitivity (refer to amplifier service section).

**b. Zero.** Turn zero adjustor knob clockwise to move points upscale; turn knob counterclockwise to move points downscale.

**c. Span**

(1) Loosen locking screw on span adjustor slider.

(2) Move slider along resistance wire; increase resistance to increase span, reduce resistance to decrease span.

(3) Tighten slider locking screw.

## 2. RANGE CHANGE

**a. General.** The total range change feature makes possible quick and easy changing of the measuring circuit range. The range panel can be removed as a calibrated unit and replaced by another panel; only a screwdriver is required for this conversion. Make conversion as follows:

(1) Loosen the screws which retain the range panel.

(2) Remove range panel and install replacement; tighten screws.

(3) Check calibration.

**b. Kits.** Range change kits are available for uncompensated ranges. Order Kit No. 919H99. Refer to the instrument nameplate and specify:

(1) Instrument model number

(2) Instrument serial number

(3) Frequency of voltage supply

(4) Present range and actuation

(5) Desired range and actuation

(6) Chart and scale (if required)

## 3. RESISTOR CALCULATIONS

This paragraph describes how the resistor values for the measuring circuit are calculated according to the range, span, and type of input being used. This information is included to supplement the measuring circuit schematic diagram (attached to Section 134) which does not specify any resistance values because of the variations available.

**a. Formulas**

$$R1 = \frac{2\,Rni + MVmin - MVc - A\,MVs}{Ia} + \frac{Rz}{4}$$

$$R2 = \frac{B\,MVs}{C - MVs}$$

$$R3 = \frac{1019 + MVc - MVmin - D\,MVs}{Ia} - \frac{Rz}{4}$$

$$R4 = 509.5 - Rz$$

**b. Nomenclature**

Ia = Current through upper branch of measuring circuit. See Table I.

A, B, C, D = Constants per Table I.

Ic = Current through lower branch of measuring circuit.
Ic = 6 ma - Ia

Rni = resistance of reference junction compensating resistor at 75°F. See Table II.

MVc = Millivoltage of thermocouple from 32°F to 75°F. See Table II.

MVmin = Millivoltage corresponding to 0% full scale; based on reference junction at 0°C.

MVmax = Millivoltage corresponding to 100% full scale; based on reference junction at 0°C.

MVs = Millivolt span (MVmax - MVmin).

Rz = Resistance of zero adjustment. See Table III.

TABLE I

CONSTANT VALUES

| Span (mv) | Ia (ma) | A | B | C | D |
|---|---|---|---|---|---|
| 0 to 40 | 4 | .021 | 20.474 | 76.923 | 1.0437 |
| 40.1 to 60 | 4 | .021 | 21.154 | 76.923 | 1.079 |
| 60.1 to 75 | 4 | .021 | 23.179 | 76.923 | 1.1844 |
| 75.1 & up* | 5.5 | .021 | 23.179 | 105.769 | 1.1844 |

* For uncompensated ranges only

TABLE II

REFERENCE JUNCTION CHARACTERISTICS

| Type Couple | Wire | Resistance in Ohms at 75°F (Rni) | MVc °F | MVc °C |
|---|---|---|---|---|
| J (I/C) | Copper | 6.787 ± .014 | 2.161 | 1.2394 |
| J | Copper | 6.754 ± .014 | 2.105 | 1.218 |
| K | Copper | 5.255 ± .011 | 1.636 | 0.952 |
| Y | Copper | 6.909 ± .014 | 2.1765 | 1.2585 |
| T | Copper | 5.359 ± .011 | 1.6149 | .9441 |
| R | Copper | 0.796 ± .002 | .2247 | .1357 |
| S | Copper | 0.796 ± .002 | .2286 | .1366 |
| Uncomp. | Manganin | 5.000 ± .010 | 0 | 0 |

TABLE III

ZERO ADJUSTMENT VALUES

| Span (mv) | Resistance ±10% (ohms) | Part No. |
|---|---|---|
| 1 to 20 | 0.4 | 723159-2 |
| 20.1 to 40 | 1.4 | -3 |
| 40.1 to 75 | 2.7 | -4 |
| 75.1 & up | 8.8 | -6 |

TABLE IV

SPAN ADJUSTOR VALUES

| Span (mv) | Active Resistance (ohms) | Part No. |
|---|---|---|
| 1 to 20 | .6552 | 363024-1 |
| 40.1 to 60 | 1.7570 | -4 |
| 60.1 & up | 4.670 | -3 |

## CONSTANT VOLTAGE UNIT — SERVICE

### 1. OUTPUT VOLTAGE CHECK

a. Disconnect the output of the constant voltage unit from the measuring circuit.

b. If a model 2720 portable test set is available, refer to the instruction manual supplied with that unit and make the prescribed test connections; the test unit includes settings which connect appropriate resistors to the input binding posts to check constant voltage units at their rated voltage and loading.

c. If either a portable potentiometer (model 126W3V or 1117) or a precision laboratory type potentiometer (Rubicon Type B) is used, it will be necessary to construct a voltage divider network across the output terminals of the constant voltage unit, as shown in Figure 1. A decade box may be used if available, otherwise use two part number 76098-999-(resistance value) manganin resistors or their equivalent (±0.05% tolerance). The sum of the two resistors must equal the recommended load resistance for the constant voltage unit. The value of resistor R2 must be small enough to permit accurate measurement; select the values for R1 and R2 from Figure 1.

d. If the correct voltage is not obtained, using one of the above methods, the constant voltage unit should be replaced.

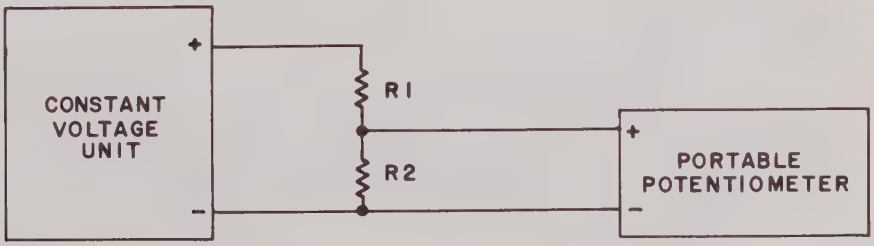


| Constant Voltage Unit | Frequency (cps) | Current (ma) | Output (volts) | Load (ohms) | Dummy Load (ohms) | | Voltage Across R2 (MV) |
|---|---|---|---|---|---|---|---|
| | | | | | R1 | R2 | |
| 365389-1 | 50-60 | 6 | 1.029 | 171.5 | 161.5 | 10 | 60 |
| 2 | 50-60 | 8 | 1.029 | 128.63 | 121.1 | 7.5 | 60 |
| 3 | 50-60 | 6 | 4.200 | 700. | 690 | 10 | 60 |
| 4 | 25 | 6 | 1.029 | 171.5 | 161.5 | 10 | 60 |
| 5 | 25 | 8 | 1.029 | 128.63 | 121.1 | 7.5 | 60 |
| 6 | 25 | 6 | 4.200 | 700. | 690 | 10 | 60 |
| 8 | 50-60 | 6 | 5.0637 | 843.95 | 833.95 | 10 | 60 |

32-E-65-18

Figure 1. Constant Voltage Unit, output voltage check

## 2. TROUBLESHOOTING

**a. General.** An inoperative or malfunctioning constant voltage unit should be replaced. Since it may be necessary, however, to service this unit in the field, voltage and resistance checks are described below. Component locations on the printed wiring board are shown in Figure 2. Check points A, B, C, D, and E are located physically in Figure 3 and schematically in Figure 4.

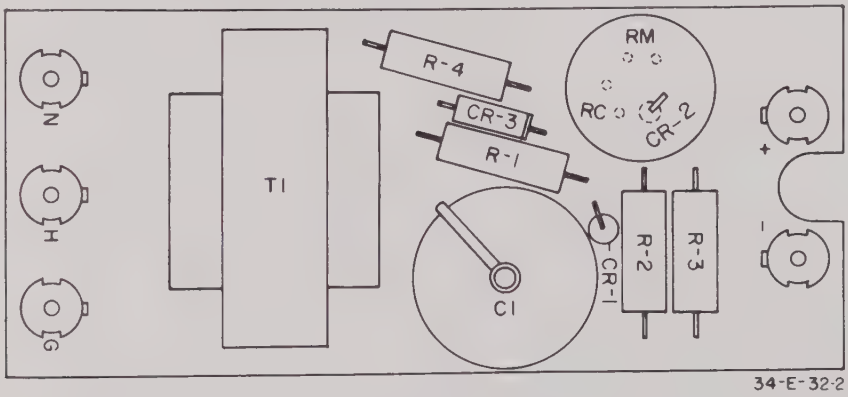


Figure 2. Constant Voltage Unit, component location diagram.

### b. Voltage Checks

(1) Connect the unit as described in paragraph 1 above.

(2) Check voltages, using a multimeter (20,000 ohms per volt), from the primary of the transformer up to and including the second stage zener diode. Voltages should be in accordance with Table 1.

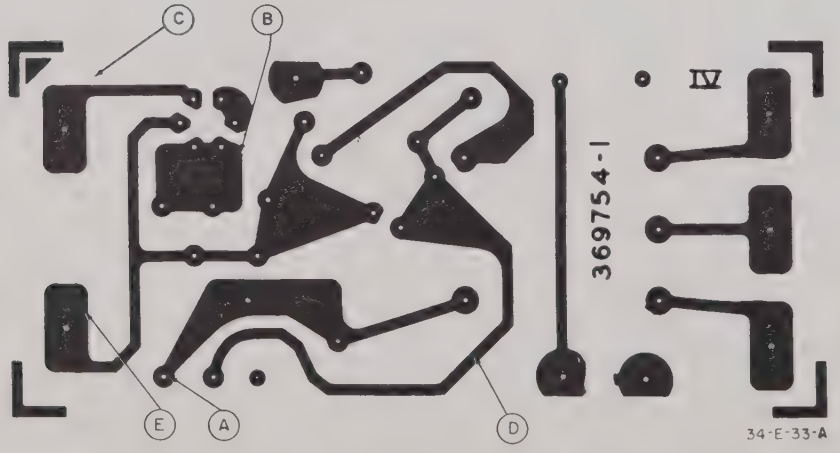


Figure 3. Printed wiring board diagram, showing test point locations.

## CONSTANT VOLTAGE UNIT — SERVICE

TABLE 1

| C.V.U. | Replacement | D.C. Voltage between points | | | | Component Values | | | | |
|---|---|---|---|---|---|---|---|---|---|---|
| | | A-D | A-E | B-E | C-E | R1 (ohms) | R2 (ohms) | R3 (ohms) | R4 (ohms) | C1 (mfd) |
| 365389-1 | 365389-501 | 55 | 16 | 6.65 | 1.029 | - | 29.4K | 787 | 2100 | 100 |
| 2 | 502 | 55 | 16 | 6.65 | 1.029 | 3400 | 19.1K | 619 | 3400 | 100 |
| 3 | 503 | 55 | 16 | 6.65 | 4.2 | - | 29.4K | 787 | 2100 | 100 |
| 4 | 504 | 55 | 16 | 6.65 | 1.029 | - | 29.4K | 787 | 2100 | 100 |
| 5 | 505 | 55 | 16 | 6.65 | 1.029 | 3400 | 19.1K | 619 | 3400 | 100 |
| 6 | 506 | 55 | 16 | 6.65 | 4.2 | - | 29.4K | 787 | 2100 | 100 |
| 8 | 508 | 55 | 16 | 6.65 | 5.0637 | - | 29.4K | 787 | 2100 | 100 |

### c. Resistance checks

(1) Disconnect supply voltage.

(2) Discharge capacitor $C_1$.

(3) Use a multimeter to check resistances; values should be as specified in Table 1.

## 3. REPAIRS

**a.** If CR-3, C1, R2, R3, or R4 is defective, it may be replaced with an equivalent part having the same tolerance as the original.

**b.** If the defective component is CR-1, CR-2, Rc, or Rm do not attempt field repairs; the values of each of these components is critical to the accuracy of the constant voltage unit.

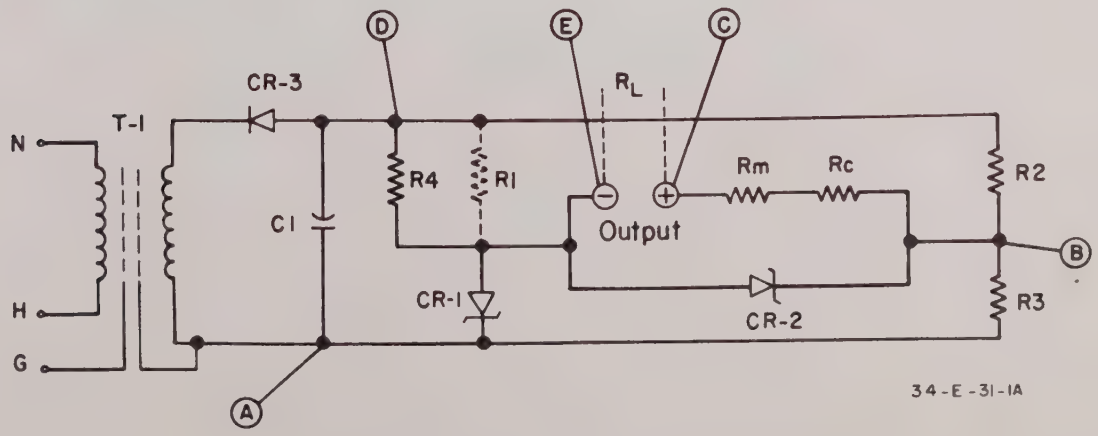


Figure 4. Constant Voltage Unit, schematic diagram.

634-0007-150

## AC-DC VOLTAGE UNIT SERVICE

### 1. OUTPUT VOLTAGE CHECK

If loss of instrument sensitivity cannot be attributed to loose connections, weak amplifier tubes, etc., check the ac-dc voltage unit for proper output voltage:

a. Break the output connections of the ac-dc voltage unit.

b. Connect a 250-ohm ±5% dummy load resistor and a 20,000-ohm-per-volt voltmeter in parallel across the output terminals. If the measured output voltage is lower than 1.1 volts dc, replace the unit.

### 2. INSTALLATION OF REPLACEMENT UNIT

a. Shut off instrument power.

b. Note or tag the five external connections, i.e., line (H and N), ground (G), and output (+ and -).

c. Break external connections.

d. Remove the two mounting screws and remove the unit from its mounting surface.

e. Install replacement unit by reversing preceding steps (use attached wiring diagram to verify noted connections).

### 3. FIELD SERVICE

a. **GENERAL.** For field service, voltage and resistance checks are given below. Replace defective components with equivalent components having the same tolerances. Component locations on the printed wiring board are shown in figure 1.

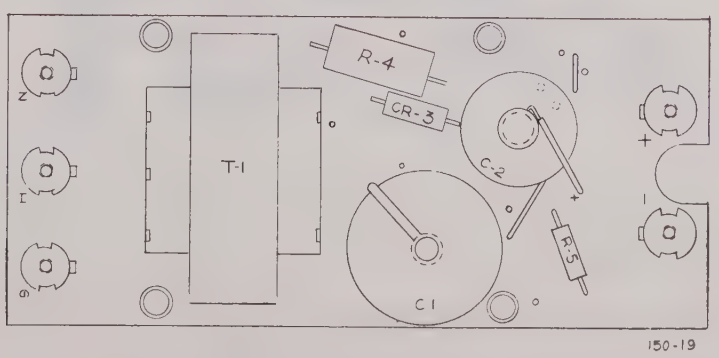


Figure 1. AC-DC voltage unit, component layout diagram

### b. VOLTAGE CHECKS

(1) Break line voltage connections and remove the unit from the instrument. Disassemble the circuit board from the mounting plate by removing the screws and cover mounting posts.

(2) Connect the unit to a line voltage source.

(3) Refer to Table 1 and check voltages with a multimeter. Check point locations are shown physically in figure 2 and schematically in figure 3.

Table 1
VOLTAGE VALUES

| MEASUREMENT | VOLTAGE |
|---|---|
| Supply Voltage | 120 v ac |
| A to B | 57 v ac (r m s) |
| C to B | 75 v dc (approx.) |
| C to D | 75 v dc (approx.) |
| D to B | 1.5 v dc |

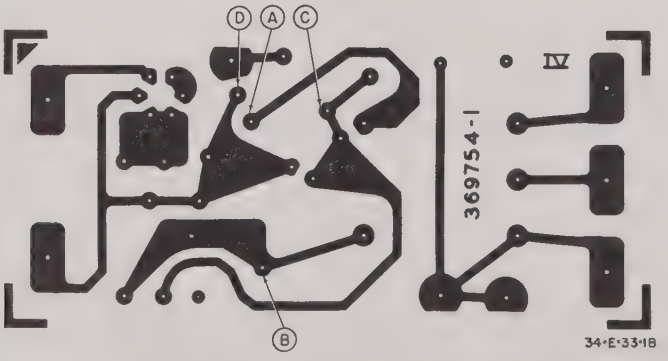


Figure 2. Printed Wiring Board Diagram, showing test point locations

### c. RESISTANCE CHECKS

(1) Disconnect the line voltage source.

(2) Discharge capacitors C-1 and C-2.

(3) Refer to figure 3 and check for the values specified in Table 2.

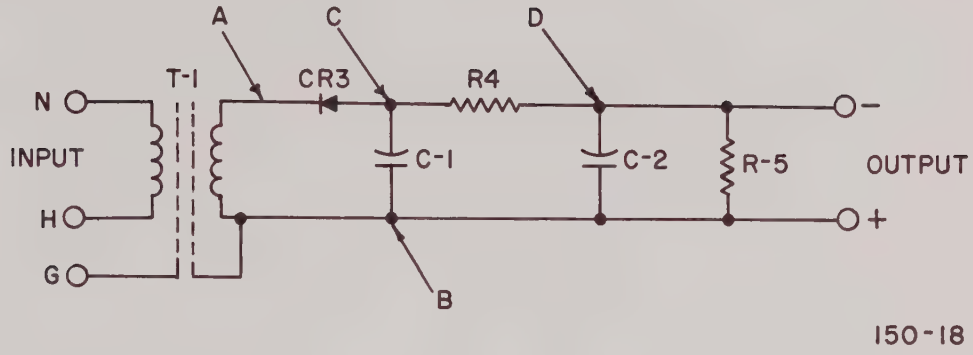


Figure 3. AC-DC voltage unit, schematic diagram

Table 2
COMPONENT VALUES

| Part Number of Unit | Replacement Part Number | Frequency (cps) | R-4 (ohms) | R-5 (ohms) | C-1 (MFD) | C-2 (MFD) |
|---|---|---|---|---|---|---|
| 369777-1 | 369777-501 | 50-60 | 9.53K | 1K | 100 | 25 |
| 369777-2 | 369777-502 | 25 | 12.10K | 1K | 100 | 25 |

**AMPLIFIER** **SERVICE**

## 1. GENERAL

**a. Fuse.** The amplifier fuse is located on the top of the amplifier chassis. If instrument fails to operate, check the fuse and replace if defective.

Warning: Do not replace fuse with the instrument energized. Turn the power switch off.

(1) Replace with a 1/2-ampere Slo-Blo fuse.

(2) Check elsewhere for the source of trouble if the replacement fuse burns out.

**b. Tubes.** Refer to the tube location chart on the amplifier chassis for the correct tube arrangement. Check tubes as follows:

(1) Turn off the instrument power switch and allow the tubes to cool.

(2) To remove a tube shield, depress the shield, turn it counterclockwise, and lift it from the tube.

(3) Remove tubes with a straight upward pull.

(4) Check the tubes on any standard tube checker. Replace weak or defective tubes, and readjust amplifier sensitivity (see note below).

Note. Amplifier tubes may be obtained from Brown Instruments Division or from any electronic equipment supply store. The standard tube designation is marked on each tube. Specify:

| Standard Tube Designation | Brown Part No. |
|---|---|
| Voltage Tube 7025 | 353308-6 |
| Voltage Tube 12AX7 | 353308-2 |
| Power Tube 12BH7 | 353308-3 |

Note. It is recommended that 12BH7 and 7025 tubes be obtained only from Brown Instruments, where they are tested and selected for particular operating characteristics.

**c. Emergency Operation.** The two power tubes are connected so that it is possible to operate the instrument (with decreased sensitivity) on just one power tube. It is necessary however for the two voltage tubes to be operative for the instrument to function. In an emergency, a 12BH7 power tube can be substituted

for the 12AX7 voltage tube; a 12AX7 can be substituted for the 7025 voltage tube, or a 7025 can be substituted for a 12AX7. This arrangement results in minimum loss of sensitivity. Readjust for maximum sensitivity before placing instrument in service. Install replacement tubes as soon as possible.

**d. Sensitivity Adjustment.** Amplifier sensitivity is adjusted by means of a variable resistor. A slotted shaft extends through the top of the amplifier chassis for this adjustment. With the instrument energized and at balance somewhere on scale:

(1) Turn the adjustment clockwise (increase sensitivity). If the pen oscillates, reduce sensitivity until the oscillation just stops.

(2) Check the adjustment by displacing the pen 1% on each side of the balance point. The pen should return to within 0. 1% of the balance point from either direction. The adjustment can be turned further counterclockwise for added stability as long as sensitivity is retained.

## 2. SERVICE

**a. Performance Checks.** Make the following checks to determine whether the amplifier is operating properly.

(1) Disconnect the amplifier input leads from the measuring circuit panel.

(2) Connect the amplifier leads to a portable potentiometer (or equivalent microvolt source), and connect a voltage divider across the output of the potentiometer as shown in Fig. 1.

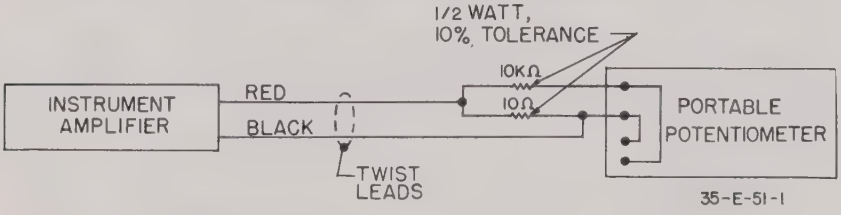


Figure 1. Amplifier test connections.

(3) Turn the amplifier sensitivity adjustment fully clockwise.

(4) Turn on instrument power.

(5) The amplifier input signal required to balance the instrument (stop the balancing motor) should be within ±5 microvolts. Note the value of this signal; increase the input voltage + 1/2 microvolt and then - 1/2 microvolt from the balance signal voltage. This should cause the balancing motor to drive slowly one way, and then reverse. The input signal required to balance the system may vary about ± 1/2 microvolt depending on pen position and the variation in friction over full scale.

(6) If the amplifier does not perform as described above, or if the pen moves erratically during these checks, an amplifier defect is indicated. Replace the amplifier if a spare is available. If not, replace the tubes and converter or make voltage and resistance measurements as described below to locate the defective part.

**b. Removal.** Whenever necessary to remove the amplifier from the instrument case, proceed as follows:

(1) Loosen the amplifier mounting screws.

(2) Remove the retaining screws located above the amplifier mounting screws.

(3) Disconnect the amplifier leads from the measuring circuit panel.

(4) Disconnect the amplifier power cable connector.

(5) Lift the amplifier vertically about 1/4 inch to disengage the mounting brackets; then pull straight out.

**c. Resistance Checks.** Refer to amplifier schematic wiring diagram (Section 142) and check the resistances specified in Table I.

TABLE I RESISTANCE CHECKS

| From | To | Resistance (ohms) | Component(s) |
|---|---|---|---|
| V-101 pin 1 | V-101 pin 6 | 2.2 meg ±10% | R-101, R-104, R-121 |
| V-101 pin 2 | GND | 10 meg ±20% | C-101, R-128 |
| V-101 pin 3 | GND | 19 K ±10% | R-102, C-102 |
| V-101 pin 6 | V-102 pin 1 | 2 meg ±10% | R-104, R-107, R-122 |
| V-101 pin 7 | GND | 1 meg min. | R-103 |
| V-101 pin 8 | GND | 10 K ±10% | R-105, |
| V-102 pin 1 | V-102 pin 6 | 2 meg ±10% | R-107, R-110, R-123 |
| V-102 pin 2 | GND | 1 meg max. | R-106 |
| V-102 pin 3 | GND | 10 K ±10% | R-108, |
| V-102 pin 7 | GND | 1 meg min. | R-109 |
| V-102 pin 8 | GND | 18 K ±10% | R-111 |
| V-103 pin 2 | V-104 pin 2 | 2 K ±10% | R-113, R-115 |
| V-103 pin 3 | Green Wire in Power Cable | 1 K ±10% | R-117, C-111 |
| V-103 pin 7 | V-104 pin 7 | 2 K ±10% | R-114, R-116 |
| V-104 pin 8 | Green Wire in Power Cable | 1 K ±10% | R-117, C-111 |
| K-101 pin 5 | K-101 pin 3 | 3 K ±20% | T-102 primary |

**d. Voltage Checks.** Energize the amplifier (refer to amplifier schematic) and make voltage checks specified in Table II.

TABLE II VOLTAGE CHECKS

| From | To | Voltage | Measurement |
|---|---|---|---|
| Black Power Lead | White Power Lead | 115 ±2% VAC | Line Voltage |
| V-101 pin 1 | GND | 127 ±20% VDC | Plate Voltage |
| V-101 pin 2 | GND | 0 | Grid Bias |
| V-101 pin 3 | GND | 1.8 ±20% VDC | Cathode Bias |
| V-101 pin 4 | V-101 pin 9 | 6.0 ±10% VDC | Filament Voltage |
| V-101 pin 6 | GND | 138 ±20% VDC | Plate Voltage |
| V-101 pin 7 | GND | 0 | Grid Bias |
| V-101 pin 8 | GND | 1.5 ±20% VDC | Cathode Bias |
| V-102 pin 1 | GND | 155 ±20% VDC | Plate Voltage |
| V-102 pin 2 | GND | 0 | Grid Bias |
| V-102 pin 3 | GND | 1.7 ±20% VDC | Cathode Bias |
| V-102 pin 4 | V-104 pin 9 | 6.0 ±10% VAC | Filament Voltage |
| V-102 pin 6 | GND | 190 ±20% VDC | Plate Voltage |
| V-102 pin 7 | GND | 0 | Grid Bias |
| V-102 pin 8 | GND | 5.0 ±20% VDC | Cathode Bias |
| V-103 pin 1 | GND | 275 ±30% VAC | Plate Voltage |
| V-103 pin 1 | V-103 pin 6 | 550 ±40% VAC | Plate Voltage |
| V-103 pin 2 | GND | 0 | Grid Bias |
| V-103 pin 4 | V-103 pin 9 | 6.0 ±10% VAC | Filament Voltage |
| V-103 pin 6 | GND | 275 ±30% VAC | Plate Voltage |
| V-104 pin 1 | GND | 275 ±30% VAC | Plate Voltage |
| V-104 pin 1 | V-104 pin 6 | 550 ±40% VAC | Plate Voltage |
| V-104 pin 4 | V-104 pin 9 | 6.0 ±10% VAC | Filament Voltage |
| V-104 pin 6 | GND | 275 ±30% VAC | Plate Voltage |

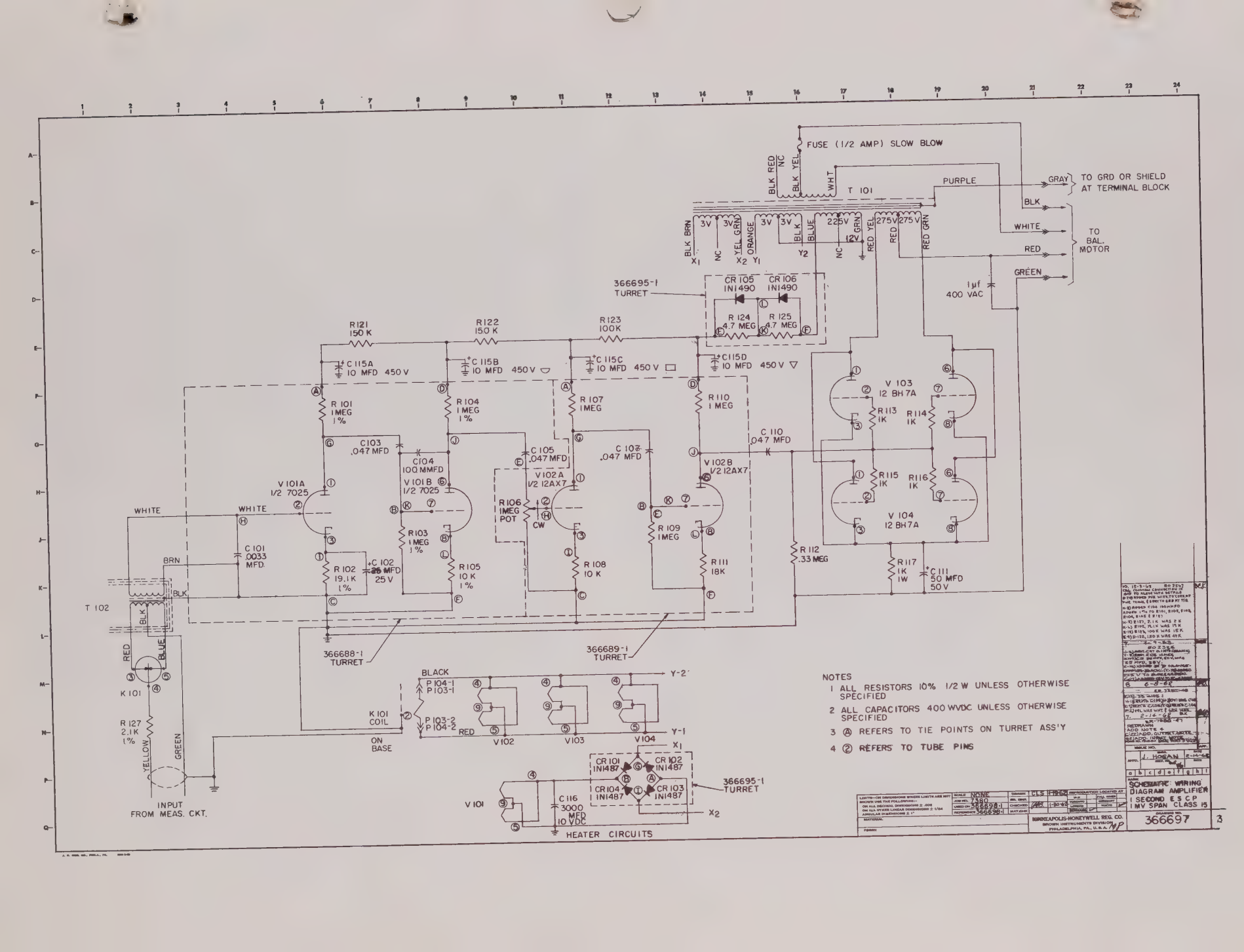
FUSE (1/2 AMP) SLOW BLOW
T 101
TO GRD OR SHIELD AT TERMINAL BLOCK
TO BAL. MOTOR
1µf 400 VAC
366695-1 TURRET
CR 105 IN1490
CR 106 IN1490
R 124 4.7 MEG
R 125 4.7 MEG
R121 150 K
R122 150 K
R123 100K
C 115A 10 MFD 450 V
C 115B 10 MFD 450 V
C 115C 10 MFD 450 V
C115D 10 MFD 450 V
V 103 12 BH7A
V 104 12 BH7A
R 101 1MEG 1%
R 104 1 MEG 1%
R 107 1MEG
R 110 1 MEG
R113 1K
R114 1K
R115 1K
R116 1K
C 110 .047 MFD
C103 .047 MFD
C104 100 MMFD
C 105 .047 MFD
C 107 .047 MFD
V 101A 1/2 7025
V 101B 1/2 7025
V 102A 1/2 12AX7
V 102B 1/2 12AX7
R106 1MEG POT CW
R 109 1MEG
R 108 10 K
R103 1 MEG 1%
R105 10 K 1%
R 102 19.1K 1%
C 102 25 MFD 25 V
C 101 0033 MFD.
R 112 .33 MEG
R117 1K 1W
C 111 50 MFD 50 V
WHITE
BRN
BLK
T 102
RED
BLUE
K 101
R 127 2.1K 1%
YELLOW
GREEN
INPUT FROM MEAS. CKT.
366688-1 TURRET
366689-1 TURRET
BLACK
P 104-1
P 103-1
P 103-2
P 104-2
K 101 COIL
ON BASE
V102
V103
V104
Y-2
Y-1
X1
X2
CR 101 IN1487
CR 102 IN1487
CR 103 IN1487
CR 104 IN1487
366695-1 TURRET
V 101
C 116 3000 MFD 10 VDC
HEATER CIRCUITS
NOTES
1 ALL RESISTORS 10% 1/2 W UNLESS OTHERWISE SPECIFIED
2 ALL CAPACITORS 400 WVDC UNLESS OTHERWISE SPECIFIED
3 Ⓐ REFERS TO TIE POINTS ON TURRET ASS'Y
4 ② REFERS TO TUBE PINS
SCHEMATIC WIRING DIAGRAM AMPLIFIER
I SECOND E.S.C.P.
I MV SPAN CLASS 15
366697
MINNEAPOLIS-HONEYWELL REG. CO.
BROWN INSTRUMENTS DIVISION
PHILADELPHIA, PA., U.S.A.

**AMPLIFIER** **SERVICE**

## 1. ADJUSTMENTS

**a. Gain Adjustment.** If the amplifier is insensitive to small changes in input signals, increase the gain by turning the gain adjustment clockwise.

**b. Damping Adjustment** (if supplied). Damping adjustment is required if the pen or indicator overshoots the balance point, or if the pen or indicator is slow in reaching the balance point. A recorder which is adjusted for optimum damping will draw a curve having a relatively sharp knee (depending on chart and pen speed) which breaks near the balance point without overshooting the balance point.

(1) If instrument overshoots balance point, turn damping adjustment clockwise until pen or indicator approaches balance point at its greatest rate without objectionable overshoot.

(2) If pen or indicator approaches balance point at too slow a speed, turn damping adjustment counterclockwise to increase rate of approach without causing overshoot.

## 2. TROUBLESHOOTING

**a.** Before starting a systematic analysis of the amplifier and power transformer assembly, make the following checks to eliminate obvious sources of trouble. (See schematic diagram.)

(1) Be sure the converter and converter plug (P2) are installed correctly and are held in place by the spring clamp.

(2) Make sure plugs P3, P4 and P5 are making good contact. Check all taper pin connections to the amplifier panel.

(3) Look carefully for broken wires, broken resistors, burned parts, and burned or open connections on the bottom of the printed circuit panel.

**b.** The following checks of "probable causes" should be made on the basis of instrument performance.

CAUTION: Regardless of the selected troubleshooting method, transistor checks and replacements must only be attempted by personnel familiar with transistor servicing techniques.

(1) NO DRIVE

(a) Check C11 and C12 for opens or shorts.
(b) Inspect plugs P3 and P4 for opens or shorts.
(c) Check the power transistor Q5 and diode CR3.

(2) DRIVE IN ONE DIRECTION

(a) Check diodes CR4 and CR5.
(b) Check the yellow to yellow-black and the yellow to yellow-green windings of transformer T1 for continuity.

(3) INSENSITIVE

(a) Check capacitor C12.
(b) Check transistors Q4 and Q5.
(c) Check diode CR3.
(d) Check transformer T3 for continuity and proper winding resistance. The primary resistance should be 1450 ± 200 ohms, and the secondary should be 22 ± 4 ohms.

**c.** Two alternate approaches can be used in the location of a defective component; the approach should be determined by the test facilities available. If an oscilloscope and a calibrated voltage source are available, the amplifier and power supply assembly should be removed from the instrument and tested as described in paragraph 3. If test facilities are limited, the amplifier can be checked as described in paragraph 4; only a multimeter and a 1.5 volt dry cell are required.

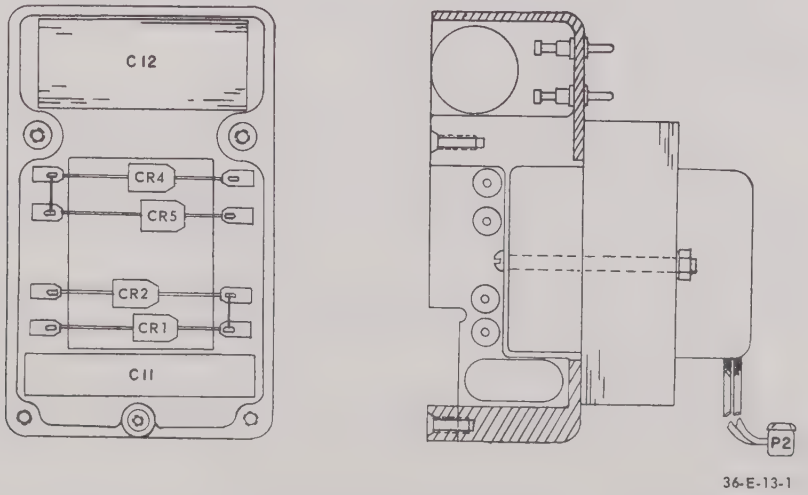


Figure 1. Power assembly.

## 3. OSCILLOSCOPE TESTS

**a.** Refer to the amplifier schematic diagram and Fig. 2. Apply a 3-millivolt signal (step 1, Fig. 2) to the amplifier and check the base of Q1 for a 2-millivolt p-p signal. Reverse the polarity of the input signal and observe that the phase of the base signal reverses. If no signal is present, or if the signal is too small, make the following checks:

(1) Continuity of input circuit.

(2) Resistance of T2 primary (red and black wires = 350 ohms; blue and black wires = 350 ohms).

(3) Check converter as follows:

(a) Driving coil. Measure converter coil energizing voltage (6 vac between terminals of P2). Measure resistance of driving coil (about 125 ohms between pins on top of converter).

(b) Leakage resistance. With ohmmeter on R x 10,000 scale, measure between converter case and pins 3, 5, and 7. Ohmmeter should read infinity between these points.

(c) Phasing and switching action. Connect a 1.5-volt dry cell to the driving coil pins on top of the converter. When the white pin is positive there should be continuity between pins 3 and 5. When the white pin is negative continuity should exist between pins 5 and 7.

(d) Contact time. Connect the driving coil to a 6-volt a-c signal and connect a carefully zeroed ohmmeter between pins 5 and 3. In this test the linear 0 to 100 d-c volt scale is used; this permits reading of contact time directly in percent of cycle. The same check should be made between pins 5 and 7. In both cases the reading should be slightly less than 50% full scale; this verifies the break-before-make contact action.

**b.** Apply a 3-millivolt signal to input (step 2, Fig. 2) and check collector of Q1 for a 20-millivolt p-p signal. If the signal is incorrect, make the following checks:

(1) Measure junction of R7 and R9 for 34 ± 5 volts dc with respect to amplifier reference. If voltage is incorrect, check associated supply (diodes CR1 and CR2).

(2) Check d-c operating voltages of Q1 (refer to schematic diagram for check points and values). If collector-emitter voltage is low, Q1 is probably faulty. If other voltages are in error, check R2, R3, R5, and R7.

(3) Check C1 and C3 for opens or shorts.

(4) If signal appears at Q1 collector, but not at Q2 base, C14 is open.

**c.** Apply a 30-microvolt signal to input (step 3, Fig. 2) and check collector of Q2 for a 5-millivolt p-p signal. If the signal is incorrect, measure the d-c operating voltages of Q2 (see schematic diagram). If the collector-emitter voltage is low, Q2 is probably defective. Check R1, R4, R10 and R24, if other volt-

| STEP | D-C INPUT VOLTAGE | TEST POINT | VOLTAGE READING | WAVE FORM |
|---|---|---|---|---|
| 1 | 3 MV | Q1-BASE | 2MV P-P | |
| 2 | 3 MV | Q1-COLLECTOR | 20MV P-P | |
| 3 | 30 μV | Q2-COLLECTOR | 3 MV P-P | |
| 4 | 6 μV | Q3-COLLECTOR | 30 MV P-P | |
| 5 | ZERO | Q4-COLLECTOR | 10V P-P | 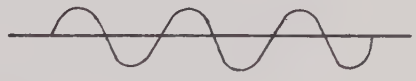 120 CPS |
| 6 | 200 μV | Q4-COLLECTOR | 20V P-P | |
| 7 | ZERO | Q5-COLLECTOR | 2 V RMS | 120 CPS |
| 8 | 10 μV | Q5-COLLECTOR | 11V RMS | 60 CPS |

NOTE
MEASUREMENTS 7 AND 8 MADE WITH RESPECT TO PIN R ON P5. ALL OTHERS MADE WITH RESPECT TO AMPLIFIER. REFERENCE.

33-E-22-1A

642-0006-150

Figure 2. Troubleshooting sequence.

ages appear abnormal. If Q2 collector signal is correct, check for the same signal at the base of Q3. If this signal is not present, check C4, the gain adjustor and associated wiring.

**d.** Q3 and Q4 are coupled direct and must be considered together. Perform steps 4, 5, and 6 in Fig. 2.

(1) Apply an input of 6 microvolts (step 4, Fig. 2) and check the collector of Q3 for a 50-millivolt p-p signal. Raise and lower the input signal and vary the gain adjustment; the signal level should rise and fall and should retain the proper wave form.

(2) With an input of zero (step 5, Fig. 2) check the signal at the collector of Q4. Wave form should be a 120 cps sine wave, 10 volts p-p.

(3) Raise the input to 200 microvolts (step 6, Fig. 2) and measure at the collector of Q4 for a 20-volt p-p signal. If this reading is low, measure the voltage between the collector and the emitter of Q4. If the collector-emitter voltage is less than 6.0 volts dc, replace Q4.

**e.** Check Q5, using steps 7 and 8 in Fig. 2.

## 4. MULTIMETER TESTS

**a.** Refer to the amplifier schematic diagram supplied with this instruction. The following tests will all be made with the amplifier and power transformer assembly in the instrument. If possible the indicator carriage should be set at 50% full scale so that any effect of checks will be apparent immediately.

NOTE: It is always preferable to replace a defective amplifier with a spare unit. The following procedure is intended for situations where it is necessary to place a defective amplifier back in service.

(1) Check supply voltages.

(a) Check that line voltage appears between terminals W and B on plug 4. Incorrect line voltage may affect the various supply voltages and should be considered when checking the voltage at each winding of the power transformer T1.

(b) Check the supply voltages to the output power stage (Q5) between pins A and G and between pins B and G on the amplifier panel.

(c) Check the supply voltage to the amplification stages (Q1 through Q4) between pins F and D on the amplifier panel.

(d) Check the supply voltage to the converter between the terminals of the converter cap (plug 2).

(2) If any supply voltages are missing or radically incorrect turn off the instrument power, check the continuity of the particular winding and check any diodes used with the winding.

(3) Check the operation of the power output stage as follows:

(a) Open the input circuit.

(b) Connect a jumper to pin 3 on the amplifier panel; connect the other end of the jumper first to pin 1 then to pin 2. The indicator should drive first to one end of scale and then to the other.

(c) If the indicator does not move, a component in the output stage is probably defective.

(d) Switch off power to the instrument and check transformer T3 for continuity and proper winding resistance. The primary resistance should be 1450 ± 200 ohms, and the secondary should be 22 ± 4 ohms.

(e) Check Q5 or replace if practical.

(f) If the previous checks fail to identify the source of trouble, it will be necessary to check all the resistors associated with the output stage; be sure to disconnect one end of each resistor before testing with a multimeter (or observe equivalent precautions).

(4) Check converter.

(a) Driving Coil. Measure converter coil resistance; approximately 125 ohms between the pins on top of the converter.

(b) Leakage resistance. With ohmmeter on R x 10,000 scale, measure between converter case and pins 3, 5, and 7. Ohmmeter should read infinity between these points.

(c) Continuity. Connect a 1.5 volt cell to the driving coil pins on top of the converter. When the white pin is connected to the positive battery terminal there should be continuity between pins 3 and 5. When the white pin is connected to the negative battery terminal there should be continuity between pins 5 and 7.

(5) Check amplifier stages.

(a) Refer to the amplifier schematic diagram and check the emitter, base, and collector voltages at each amplification stage. Start at Q4 and proceed through Q1.

(b) If the voltages in any stage are not within the specified tolerance, disconnect power to the amplifier and check all the resistors associated with that stage. Be sure to disconnect each resistor or observe equivalent precautions.

(c) The transistor is probably defective if all the resistance values are within tolerance but the stage voltages are wrong. Check transistor or replace if practical.

| PART NO. | GAIN (SEE GAIN OPTION BLOCK) | IMPEDANCE | FILTER | BURNOUT | R6 | R11 | R25 | R26 | R27 | DRAWING CLASS |
|---|---|---|---|---|---|---|---|---|---|---|
| 369960 | 1X | 400 Ω | NO | NO | 6.8K | 22K | 47K | 22K | 10K | CL # 1 |
| " -2 | 1X | 400 Ω | NO | YES | " | " | " | " | " | |
| " -3 | 1X | 2.2 K | NO | NO | " | " | " | " | " | |
| " -4 | 4 X | 10K | NO | NO | " | " | " | " | " | |
| " -5 | 4 X | 10K | YES | NO | " | " | " | " | " | |
| " -6 | 12 X | 18K | YES | NO | 5.6K | 12 K | 56K | 18 K | 6.8K | CL # 6 |

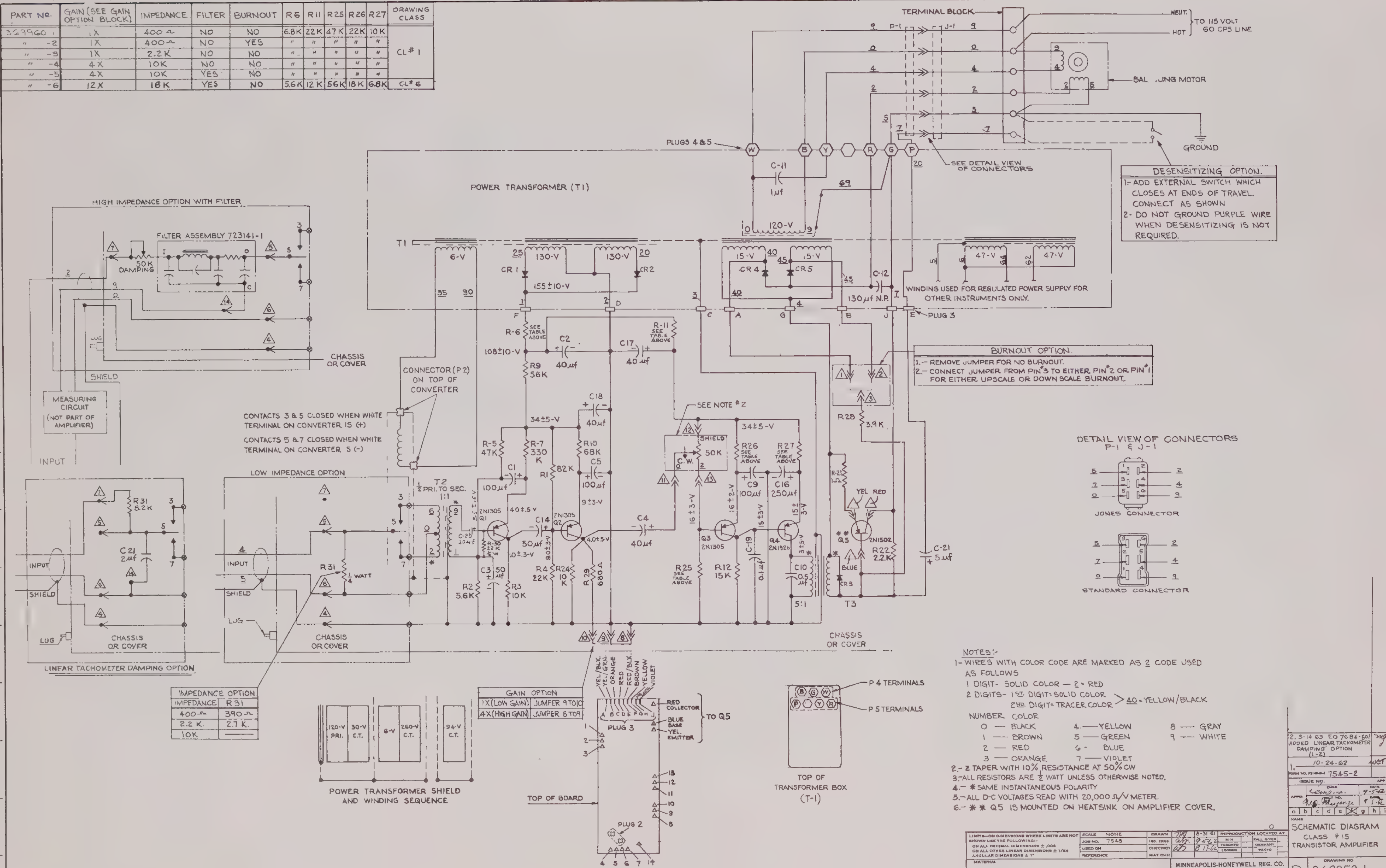


DESENSITIZING OPTION.

1- ADD EXTERNAL SWITCH WHICH CLOSES AT ENDS OF TRAVEL. CONNECT AS SHOWN
2- DO NOT GROUND PURPLE WIRE WHEN DESENSITIZING IS NOT REQUIRED.

BURNOUT OPTION.

1.- REMOVE JUMPER FOR NO BURNOUT.
2.- CONNECT JUMPER FROM PIN 3 TO EITHER PIN 2 OR PIN 1 FOR EITHER UPSCALE OR DOWN SCALE BURNOUT.

| IMPEDANCE OPTION | |
|---|---|
| IMPEDANCE | R31 |
| 400 Ω | 390 Ω |
| 2.2 K. | 2.7 K. |
| 10K | —— |

| GAIN OPTION | |
|---|---|
| 1X (LOW GAIN) | JUMPER 9 TO 10 |
| 4X (HIGH GAIN) | JUMPER 8 TO 9 |

NOTES:-

1- WIRES WITH COLOR CODE ARE MARKED AS 2 CODE USED AS FOLLOWS
   1 DIGIT- SOLID COLOR — 2 = RED
   2 DIGITS- 1ST DIGIT: SOLID COLOR, 2ND DIGIT: TRACER COLOR > 40 = YELLOW/BLACK

| NUMBER | COLOR | | | | |
|---|---|---|---|---|---|
| 0 | BLACK | 4 | YELLOW | 8 | GRAY |
| 1 | BROWN | 5 | GREEN | 9 | WHITE |
| 2 | RED | 6 | BLUE | | |
| 3 | ORANGE | 7 | VIOLET | | |

2.- Z TAPER WITH 10% RESISTANCE AT 50% CW
3.- ALL RESISTORS ARE ½ WATT UNLESS OTHERWISE NOTED.
4.- * SAME INSTANTANEOUS POLARITY
5.- ALL D-C VOLTAGES READ WITH 20,000 Ω/V METER.
6.- ** Q5 IS MOUNTED ON HEATSINK ON AMPLIFIER COVER.

2. 5-14-63 EO 7684-E01 ADDED LINEAR TACHOMETER DAMPING OPTION (1-2)
1. 10-24-62
7545-2

SCHEMATIC DIAGRAM CLASS # 15 TRANSISTOR AMPLIFIER

SCALE NONE
JOB NO. 7545
DRAWN 8-31-61

MINNEAPOLIS-HONEYWELL REG. CO.
BROWN INSTRUMENTS DIVISION
PHILADELPHIA, PA., U.S.A.

D 369959-1 CL 2

7545-AP

369959-1

**AMPLIFIER** **SERVICE**

## 1. GENERAL

**a. Fuse.** The amplifier fuse is on top of the amplifier chassis. If the instrument fails to operate:

(1) Check the fuse

(2) If the fuse is defective, install a new 1/2-ampere Slo-Blo* fuse. Check elsewhere for the source of trouble if the replacement fuse burns out.

NOTE: Do not replace the fuse with the instrument energized; switch the instrument power off.

**b. Tubes.** Refer to the tube location diagram on the amplifier cover for the correct tube arrangement. Check tubes as follows:

(1) Switch the instrument power off and allow the tubes to cool.

(2) To remove a tube shield, depress the shield, turn it counterclockwise, and lift it from the tube.

(3) Remove tubes with a straight upward pull.

(4) Check tubes on any standard tube checker. Replace weak or defective tubes, and readjust the amplifier sensitivity setting.

NOTE: The 12AX7 tubes may be obtained from Brown Instrument Division, or from any electronic equipment supply store. It is recommended, however, that the 12BH7 and 7025 tubes be obtained only from Brown Instrument Division, where they are tested and selected for particular operating characteristics. The standard designation is marked on each tube; specify:

| STANDARD TUBE DESIGNATION | BROWN INSTRUMENT PART NUMBER |
|---|---|
| 7025; voltage amplifier | 353308-6 |
| 12AX7; voltage amplifier | 353308-2 |
| 12BH7; power amplifier | 353308-3 |

## 2. EMERGENCY OPERATION

**a.** The two power tubes are connected so that it is possible to operate the instrument (with decreased sensitivity) on just one power tube. It is necessary, however, for the two voltage tubes to be operative for the instrument to function. In an emergency a 12BH7 power tube can be substituted for the 12AX7 voltage tube; a 12AX7 can be substituted for the 7025 voltage tube, or a 7025 can be substituted for a 12AX7. This arrangement keeps the loss in sensitivity to a minimum.



* Trademark - Littlefuse Inc.

**b.** If tube substitutions are made, readjust the amplifier for maximum sensitivity before placing the instrument back in service. Install the replacement tubes as soon as possible.

## 3. SENSITIVITY ADJUSTMENT

**a.** Amplifier sensitivity is adjusted by means of a variable resistor on top of the amplifier chassis.

**b.** Turn the adjustment clockwise (increase sensitivity) until the pen oscillates; reduce sensitivity (turn adjustment counter clockwise) until oscillation just stops.

**c.** Check at several points on the scale to be sure there is no oscillation at any position.

## 4. TROUBLESHOOTING

**a. General.** If an amplifier malfunction is isolated as the cause of instrument failure, and if the performance of routine maintenance fails to identify the malfunction, service the amplifier as described below.

**b. Removal.**

(1) Loosen the amplifier mounting screws.

(2) Remove the retaining screws located above the amplifier mounting screws.

(3) Disconnect the amplifier input cable from the terminals marked G, Y, and X on the measuring circuit panel.

(4) Disconnect the amplifier power cable connector.

(5) Lift the amplifier vertically about 1/4 of an inch to disengage the mounting brackets; then pull straight out.

**c. Resistance Checks**

With the amplifier removed from the instrument and the tubes removed from their sockets, check the resistance values specified on the amplifier schematic diagram included in this manual.

**d. Voltage Checks**

Replace the tubes, energize the amplifier, and make the voltage checks specified on the amplifier schematic diagram.

**AMPLIFIER** **SERVICE**

## 1. GENERAL

**a. FUSE** The amplifier fuse is on the top of the amplifier chassis. If the instrument fails to operate, check the fuse and replace if defective.

WARNING: Do not replace fuse with the instrument energized. Switch the power off.

(1) Replace with a 1/2-ampere Slo-Blo* fuse.

(2) Check elsewhere for the source of trouble if the replacement fuse burns out.

**b. TUBES** Refer to the tube location chart on the amplifier chassis for the correct tube arrangement. Check tubes as follows:

(1) Switch off the instrument power and allow the tubes to cool.

(2) To remove a tube shield, depress the shield, turn it counterclockwise, and lift it from the tube.

(3) Remove tubes with a straight upward pull.

(4) Check the tubes on a standard tube checker. Replace weak or defective tubes, and readjust amplifier sensitivity.

NOTE: Amplifier tubes may be obtained from any electronic equipment supply store. It is recommended however, that the 12BH7 and the 7025 tubes be obtained only from Brown Instrument Division where they are tested and selected for particular operating characteristics. The standard tube designation is marked on each tube. Specify:

| Standard Tube Designation | Brown Part Number |
|---|---|
| Voltage Tube 7025 | 353308-6 |
| Voltage Tube 12AX7 | 353308-2 |
| Power Tube 12BH7 | 353308-3 |

**c. EMERGENCY OPERATION** The two power tubes are connected so that it is possible to operate the instrument (with decreased sensitivity) on just one power tube. It is necessary however for the two voltage tubes to be operative for the instrument to function. In an emergency, a 12BH7 power tube can be substituted for the 12AX7 voltage tube; a 12AX7 can be substituted for the 7025 voltage tube, or a 7025 can be substituted for a 12AX7. This arrangement results in minimum loss of sensitivity. Readjust gain for a dead zone of 0.2% or less before placing instrument in service. Install replacement tubes as soon as possible.

*Trademark-Littlefuse Co.

## 2. SERVICE

If an amplifier malfunction is isolated as the cause of instrument failure and the performance of routine maintenance fails to identify the malfunction, service the amplifier as described below.

**a. REMOVAL**

(1) Loosen the amplifier mounting screws.

(2) Remove the retaining screws located above the amplifier mounting screws.

(3) Disconnect the amplifier leads from the terminals marked "B", "R", and "S" on the measuring circuit panel.

(4) Disconnect the amplifier power cable connector.

(5) Lift the amplifier vertically about 1/4 inch to disengage the mounting brackets; then pull straight out.

**b. RESISTANCE CHECKS** Refer to amplifier schematic wiring diagram and check the resistances specified in Table 1.

**c. VOLTAGE CHECKS** Energize the amplifier (refer to amplifier schematic) and make voltage checks specified in Table 2.

TABLE 1

RESISTANCE CHECKS

| From | To | Resistance (ohms) | Component(s) |
|---|---|---|---|
| V-101 pin 1 | V-101 pin 6 | 2.2 meg ±10% | R-101, R-104, R-121 |
| V-101 pin 2 | GND | .5 meg ±20% | R-128 |
| V-101 pin 3 | GND | 19 K ±10% | R-102, C-102 |
| V-101 pin 6 | V-102 pin 1 | 2 meg ±10% | R-104, R-107, R-122 |
| V-101 pin 7 | GND | 1 meg min. | R-103 |
| V-101 pin [illegible] | GND | 10 K ± 10% | R-105, C-104 |
| V-102 pin [illegible] | V-102 pin 6 | 2 meg ±10% | R-107, R-110, R-123 |
| V-102 pin 2 | GND | 1 meg max. | R-106 |
| V-102 pin 3 | GND | 10 K ± 10% | R-108 |
| V-102 pin 7 | GND | 1 meg min. | R-109, C-107, C-108 |
| V-102 pin 8 | GND | 18 K ± 10% | R-111 |
| V-103 pin 2 | V-104 pin 2 | 2 K ± 10% | R-113, R-115 |
| V-103 pin 3 | Green Wire in Power Cable | 1 K ± 10% | R-117, C-111 |
| V-103 pin 7 | V-104 pin 7 | 2 K ± 10% | R-114, R-116 |
| V-104 pin 8 | Green Wire in Power Cable | 1 K ± 10% | R-117, C-111 |
| V-103-2 | GND | .33 meg min. | R-112 |
| K-4 | GND | 0 ohms | Shield |

| NO. | DESCRIPTION | PART NO. | ITEM 1 2 3 4 5 6 7 8 9 10 |
|---|---|---|---|

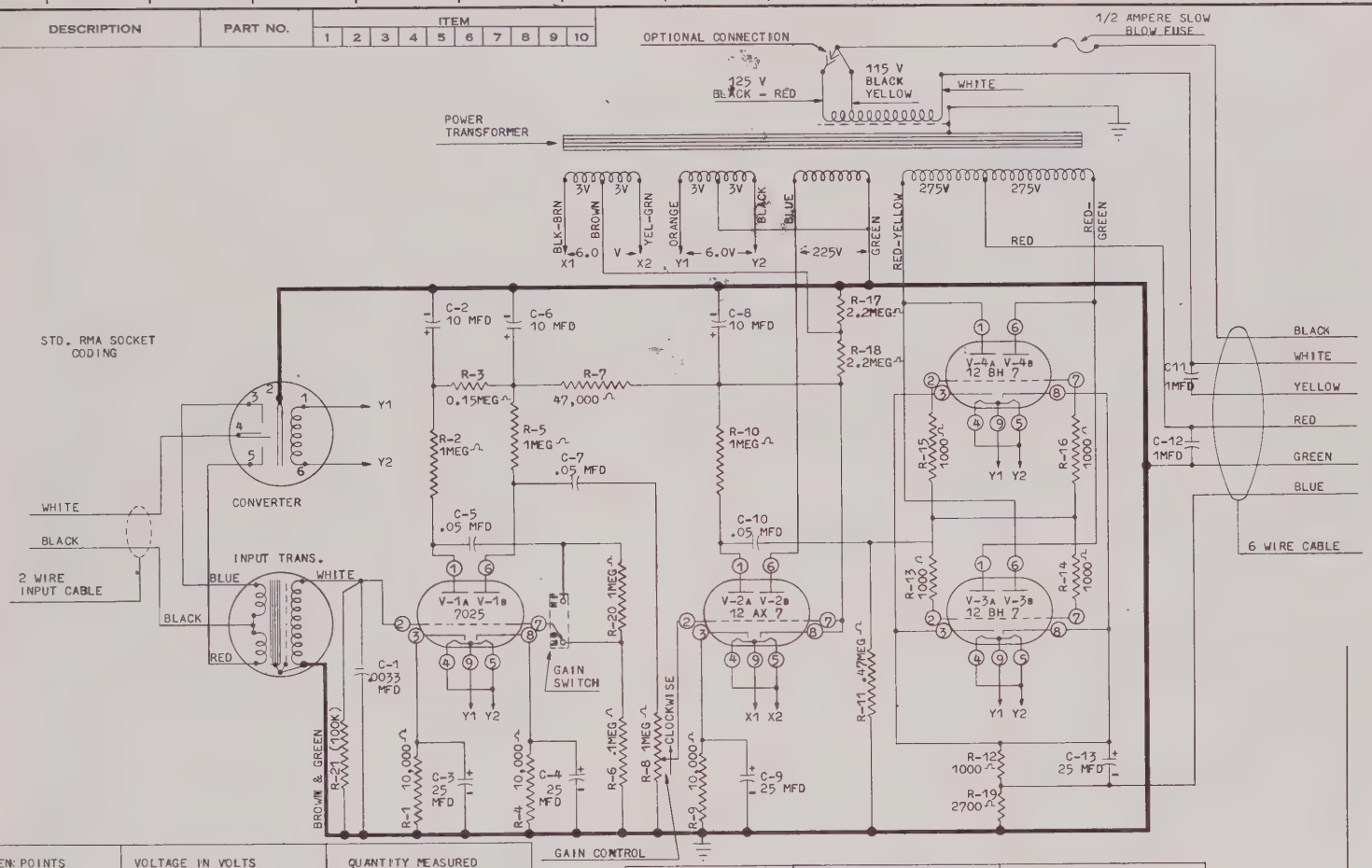


| BETWEEN POINTS | VOLTAGE IN VOLTS | QUANTITY MEASURED |
|---|---|---|
| BLACK AND WHITE LEADS | 117VAC ± 2% 60 CY. A.C. | LINE VOLTAGE ADJUST TO PROPER VALUE BY VARIAC |
| 2-6 AND GROUND | 225 ±20 VOLTS A.C. | RECTIFIER PLATE VOLTS |
| 2-8 AND 2-9 | 90 ±10% VOLTS D.C. | HEATER CATHODE POTENTIAL |
| 3-1 AND GROUND | 275 ±30 VOLTS A.C. | PLATE VOLTAGE |
| 3-6 AND GROUND | 275 ±30 VOLTS A.C. | PLATE VOLTAGE |
| 4-1 AND GROUND | 275 ±30 VOLTS A.C. | PLATE VOLTAGE |
| 4-6 AND GROUND | 275 ±30 VOLTS A.C. | PLATE VOLTAGE |
| 3-1 AND 3-6 | 550 ±40 VOLTS A.C. | PLATE VOLTAGE |
| 4-1 AND 4-6 | 550 ±40 VOLTS A.C. | PLATE VOLTAGE |
| 5-1 AND GROUND | 3.15 ±10% VOLTS A.C. | FILAMENT VOLTAGE |
| 5-6 AND GROUNG | 3.15 ±10% VOLTS A.C. | FILAMENT VOLTAGE |
| 5-1 AND 5-6 | 6.3 ±10% VOLTS A.C. | FILAMENT VOLTAGE |
| 1-4 AND 5 AND 1-9 | 6.3 ±10% VOLTS A.C. | FILAMENT VOLTAGE |
| 2-4 AND 5 AND 2-9 | 6.3 ±10% VOLTS A.C. | FILAMENT VOLTAGE |
| 3-4 AND 5 AND 3-9 | 6.3 ±10% VOLTS A.C. | FILAMENT VOLTAGE |
| 4-4 AND 5 AND 4-9 | 6.3 ±10% VOLTS A.C. | FILAMENT VOLTAGE |
| 1-3 AND GROUND | 1.0 ±20% VOLTS D.C. | CATHODE BIAS |

| BETWEEN POINTS | VOLTAGE IN VOLTS | QUANTITY MEASURED |
|---|---|---|
| 1-7 AND GROUND | 0 VOLTS D.C. | GRID BIAS |
| 2-2 AND GROUND | 0 VOLTS D.C. | GRID BIAS |
| 2-8 AND GROUND | 156 TO 234 VOLTS D.C. | PLATE SUPPLY |
| 2-7 AND GROUND | 156 TO 234 VOLTS D.C. | PLATE SUPPLY |
| C-6 AND GROUND | 148 TO 222 VOLTS D.C. | PLATE SUPPLY |
| C-2 AND GROUND | 124 TO 186 VOLTS D.C. | PLATE SUPPLY |
| 2-1 AND GROUND | 68 TO 102 VOLTS D.C. | PLATE VOLTAGE |
| 1-6 AND GROUND | 40 TO 50 VOLTS D.C. | PLATE VOLTAGE |
| 1-1 AND GROUND | 40 TO 50 VOLTS D.C. | PLATE VOLTAGE |
| 1-2 AND GROUND | 0 VOLTS D.C. | GRID VOLTAGE |
| 1-8 AND GROUND | 1.0 ±20% VOLTS D.C. | CATHODE BIAS |
| 2-3 AND GROUND | 1.0 ±20% VOLTS D.C. | CATHODE BIAS |

2. 7-31-62 REDWN ADDED TABLES
ISSUE NO. APP.
APPD ENGR. REVN DATE 7-31-62 CHKT. NO. DATE
a b c d e f g h i

NAME SCHEMATIC DIAGRAM AMPLIFIER WITH MOTOR CAPACITOR AND DESENSITIZING FOR CL 15 INSTRUMENT 400Ω Z

REPRODUCTION LOCATED AT
M H FALL RIVER
TORONTO GERMANY
LONDON TOKYO
AMIENS

LIMITS—ON DIMENSIONS WHERE LIMITS ARE NOT SHOWN USE THE FOLLOWING:-
ON ALL DECIMAL DIMENSIONS ± .005
ON ALL OTHER LINEAR DIMENSIONS ± 1/64
ANGULAR DIMENSIONS ± 1°

SCALE NONE DRAWN R.C.W 7-31-62
JOB NO IND ENGR
USED ON CHECKED
REFERENCE 366961 MAT CHK
MATERIAL
FINISH

MINNEAPOLIS-HONEYWELL REG. CO.
BROWN INSTRUMENTS DIVISION
PHILADELPHIA, PA., U.S.A.

SIZE C DRAWING NO. 652114 CL 7

J. H. WEIL CO., PHILA.

c. Check at several points on scale to be sure there is no oscillation at any position.

## 4. TROUBLESHOOTING

**a. GENERAL** If amplifier malfunction is isolated as cause of instrument failure, and if routine maintenance fails to correct it, service amplifier as described below.

**b. REMOVAL.**

(1) Loosen amplifier mounting screws.

(2) Remove retaining screws (installed above amplifier mounting brackets).

(3) Disconnect amplifier input cable (and shield) from terminals marked G, Y, and X on measuring circuit panel.

(4) Disconnect amplifier power cable connector.

(5) Lift amplifier vertically about 1/4 inch to disengage mounting brackets; then pull straight out.

**c. VOLTAGE CHECKS.**

(1) Energize amplifier and check for approximate voltages shown on the Amplifier Schematic. Tube locations are shown in figure 1.

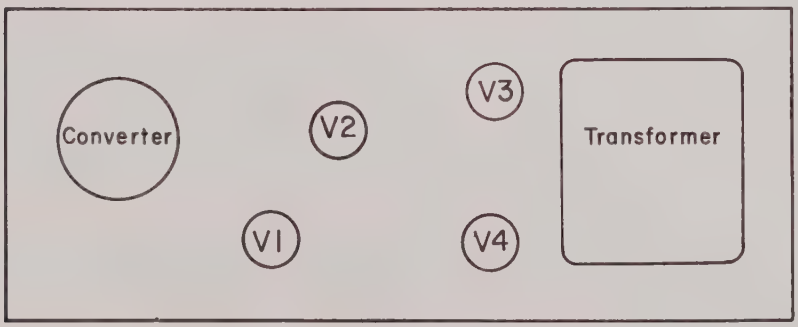


Figure 1. Amplifier, component location diagram

(2) Values on the schematic are based on a meter having an impedance of 1000 ohms per volt ac and 20,000 ohms per volt dc.

**d. RESISTANCE CHECKS.** Remove amplifier from instrument and remove converter and tubes from their sockets. Check that resistance values in each stage agree with the schematic diagram.

**AMPLIFIER** **SERVICE**

## 1. GENERAL.

**a. FUSE.** If the instrument fails to operate:

(1) Switch off instrument power.

(2) Check fuse (on top of amplifier chassis).

(3) If fuse is defective install a new Slo Blo* fuse (1/2 ampere for 60 cps; 1 ampere for 25 cps). Check elsewhere for source of trouble if replacement fuse burns out.

NOTE: Do not replace fuse with instrument energized.

**b. TUBES.** Refer to tube location diagram on amplifier cover for correct tube arrangement. Always keep a replacement set of tubes available. Check tubes as follows:

(1) Switch instrument power off and allow tubes to cool.

(2) Depress, turn counterclockwise, and lift shields from tubes.

(3) Remove tubes with a straight upward pull.

(4) Check tubes on any standard tube checker and replace those that are weak or defective.

(5) Readjust amplifier gain.

## 2. EMERGENCY OPERATION

**a.** The two power tubes are connected in parallel; the instrument can be operated (with decreased gain) on just one power tube. However, both voltage tubes must be operative for the instrument to function. In an emergency, a power tube can be substituted for a voltage tube. Keep a good voltage tube in the left-hand socket and move a power tube to the left rear socket. This arrangement keeps dead band to a minimum.

**b.** If tube substitutions are made, readjust amplifier for maximum gain before placing instrument back in service. Install replacement tubes as soon as possible.

## 3. GAIN ADJUSTMENT (SENSITIVITY)

**a.** Amplifier gain is adjusted by means of a variable resistor accessible from top of amplifier chassis.

**b.** Turn adjustment clockwise (increase gain) until recording device oscillates; reduce gain (turn adjustment counterclockwise) until oscillation just stops.

**Trademark – Littlefuse, Inc.*

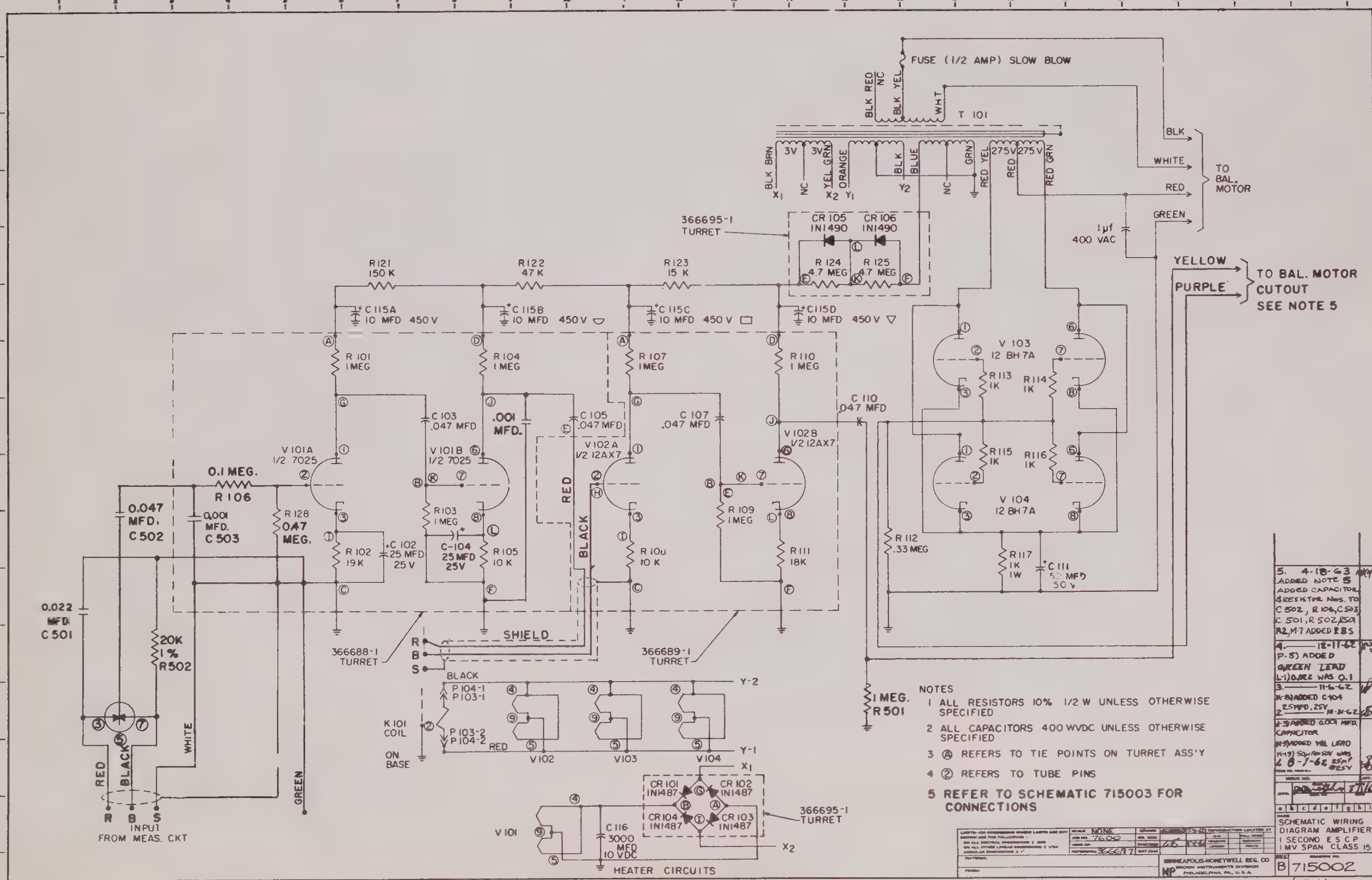
FUSE (1/2 AMP) SLOW BLOW
T 101
TO BAL. MOTOR
YELLOW
PURPLE
TO BAL. MOTOR CUTOUT SEE NOTE 5
366695-1 TURRET
CR 105 1N1490
CR 106 1N1490
R 124 4.7 MEG
R 125 4.7 MEG
R121 150 K
R122 47 K
R123 15 K
C 115A 10 MFD 450 V
C 115B 10 MFD 450 V
C 115C 10 MFD 450 V
C 115D 10 MFD 450 V
1 µf 400 VAC
V 103 12 BH7A
V 104 12 BH7A
R 113 1K
R 114 1K
R 115 1K
R 116 1K
R 117 1K 1W
C 111 50 MFD 50 V
R 112 .33 MEG
C 110 .047 MFD
R 101 1MEG
R 104 1 MEG
R 107 1MEG
R 110 1 MEG
C 103 .047 MFD
.001 MFD.
C 105 .047 MFD
C 107 .047 MFD
V 101A 1/2 7025
V 101B 1/2 7025
V 102A 1/2 12AX7
V 102B 1/2 12AX7
0.1 MEG. R 106
0.047 MFD. C502
0.001 MFD. C 503
R 128 .047 MEG.
R 102 19K
C 102 25 MFD 25 V
R 103 1 MEG
C-104 25 MFD 25V
R 105 10 K
R 106 10 K
R 109 1 MEG
R 111 18K
0.022 MFD C501
20K 1% R502
SHIELD
366688-1 TURRET
366689-1 TURRET
INPUT FROM MEAS. CKT
K 101 COIL
ON BASE
1 MEG. R 501
V101
C 116 3000 MFD 10 VDC
HEATER CIRCUITS
CR 101 1N1487
CR 102 1N1487
CR 103 1N1487
CR 104 1N1487
NOTES
1 ALL RESISTORS 10% 1/2 W UNLESS OTHERWISE SPECIFIED
2 ALL CAPACITORS 400 WVDC UNLESS OTHERWISE SPECIFIED
3 (A) REFERS TO TIE POINTS ON TURRET ASS'Y
4 (2) REFERS TO TUBE PINS
5 REFER TO SCHEMATIC 715003 FOR CONNECTIONS
5. 4-18-63 ADDED NOTE 5 ADDED CAPACITOR & RESISTOR Nos. TO C 502, R 106, C 503, C 501, R 502, R501 R2, M-7 ADDED RBS
4. 12-11-62 P-5) ADDED GREEN LEAD L-1) 0.0022 WAS 0.1
3. 11-6-62 K-8) ADDED C 104 25MFD. 25V
SCHEMATIC WIRING DIAGRAM AMPLIFIER 1 SECOND E S C P 1 MV SPAN CLASS 15
MINNEAPOLIS-HONEYWELL REG. CO. BROWN INSTRUMENTS DIVISION PHILADELPHIA, PA., U.S.A.
B 715002
(Z')
CL 8

TABLE 2

VOLTAGE CHECKS

| From | To | Voltage | Measurement |
|---|---|---|---|
| Black Power Lead | White Power Lead | 115 ±2% VAC | Line Voltage |
| V101 pin 1 | GND | 127 ±20% VDC | Plate Voltage |
| V-101 pin 2 | GND | 0 | Grid Bias |
| V-101 pin 3 | GND | 1.8 ±20% VDC | Cathode Bias |
| V-101 pin 4 | V-101 pin 9 | 6.0 ±10% VDC | Filament Voltage |
| V-101 pin 6 | GND | 138 ±20% VDC | Plate Voltage |
| V-101 pin 7 | GND | 0 | Grid Bias |
| V-101 pin 8 | GND | 1.5 ±20% VDC | Cathode Bias |
| V-102 pin 1 | GND | 155 ±20% VDC | Plate Voltage |
| V-102 pin 2 | GND | 0 | Grid Bias |
| V-102 pin 3 | GND | 1.7 ±20% VDC | Cathode Bias |
| V-102 pin 4 | V-102 pin 9 | 6.0 ±10% VAC | Filament Voltage |
| V-102 pin 6 | GND | 190 ±20% VDC | Plate Voltage |
| V-102 pin 7 | GND | 0 | Grid Bias |
| V-102 pin 8 | GND | 5.0 ±20% VDC | Cathode Bias |
| V-103 pin 1 | GND | 275 ±30 VAC | Plate Voltage |
| V-103 pin 1 | V-103 pin 6 | 550 ±40 VAC | Plate Voltage |
| V-103 pin 2 | GND | 0 | Grid Bias |
| V-103 pin 4 | V-103 pin 9 | 6.0 ±10% VAC | Filament Voltage |
| V-103 pin 6 | GND | 275 ±30 VAC | Plate Voltage |
| V-104 pin 1 | GND | 275 ±30 VAC | Plate Voltage |
| V-104 pin 1 | V-104 pin 6 | 550 ±40 VAC | Plate Voltage |
| V-104 pin 4 | V-104 pin 9 | 6.0 ±10% VAC | Filament Voltage |
| V-104 pin 6 | GND | 275 ±30 VAC | Plate Voltage |

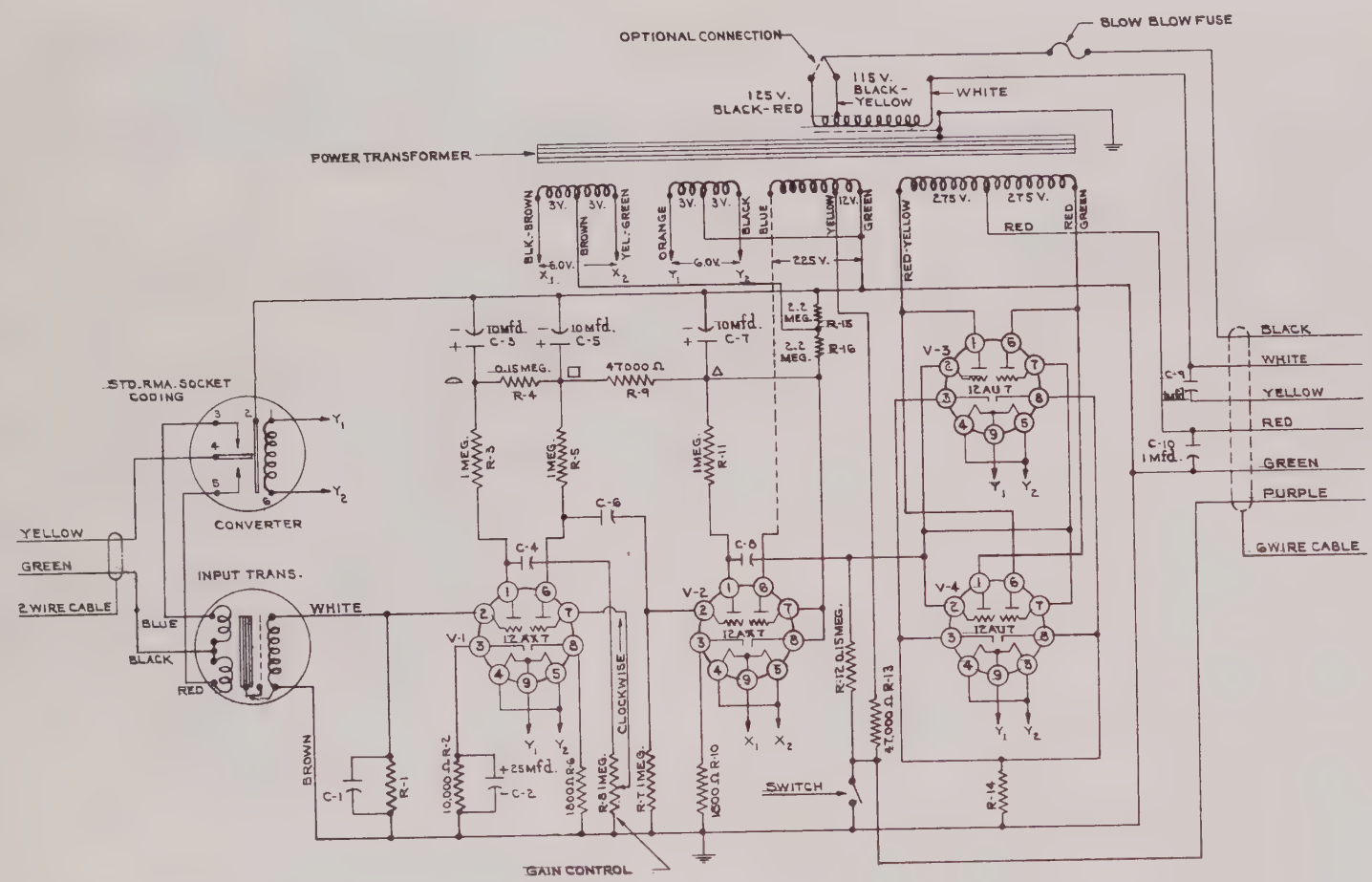


VALUES OF COMPONENT PARTS

| PART NO. | FREQ. | | C-1 | C4, C6, C8 | R-1 | R-14 |
|---|---|---|---|---|---|---|
| 356358-1 | 50-60~ | | .015 Mfd. | .05 Mfd. | 0.1 MEG. | 150 Ω |
| " -2 | 25~ | | .10 " | .10 " | " " | 300 Ω |
| " -3 | 50-60~ | | .015 " | .05 " | " " | 150 Ω |
| " -4 | 25~ | | .10 " | .10 " | " " | 300 Ω |
| " -5 | 40~ | | .033 " | .10 " | " " | " |
| " -6 | 40~ | | .033 " | .10 " | " " | " |
| " -10 | 50-60~ | | .015 " | .05 " | " " | 150 Ω |
| " -7 | 60~ | | .015 " | .05 " | OMIT | " |
| " -8 | 50~ | | .022 " | .05 " | " | " |
| " -9 | 25~ | | .10 " | .10 " | " | 300 Ω |
| " 11 or 211 | 50-60~ | | .0033 " | .05 " | " | 150 Ω |

INACTIVE

J. H. WEIL CO., PHILA., PA.

LIMITS—ON DIMENSIONS WHERE LIMITS ARE NOT SHOWN USE THE FOLLOWING:-
ON ALL DECIMAL DIMENSIONS ± .005
ON ALL OTHER LINEAR DIMENSIONS ± 1/64
ANGULAR DIMENSIONS ± 1°

SCALE
JOB NO. 8700
USED ON
REFERENCE
SPEC. NO.
MATERIAL
FINISH

DRAWN J.F.G. 2-19-62
ENGR.
CHECKED 2-21-62
MAT. CHK.

REPRODUCTION LOCATED AT
M-H
TORONTO ✓
LONDON
HAMILTON ✓
PALO ALTO
GERMANY
TOKYO ✓
AMIENS ✓

MINNEAPOLIS-HONEYWELL REG. CO.
BROWN INSTRUMENTS DIVISION
PHILADELPHIA, PA., U.S.A.

17. 3-23-64 E.O. 2897
F-2) DWG CORRECTION
16. 8-27-62
ACTIVATED ITEM 7 EO 2196
E-2) REMD NOTE "REPLACED BY 6 PT PLUG ON ITEMS 2, 8 & 9"
D-1) REMD NOTE "RED, GRAY OR WHT SHIELDED INPUT CABLE" ETC.
15 3-15-62
K-2) REM'D M.C. ACT COL. EC 4020-1729
14. 2-19-62
REDRAWN WITHOUT CHANGE
FORM NO. F-2168-8
ISSUE NO.
APP
APPROVED
ENGR.
DATE
SECT. HEAD
DATE
a b c d e f g h i

NAME
INTERNAL WIRING DIAGRAM
PART NO. 356358-1 ITEM AMPL.
WITH MOTOR CAPACITORS &
BURNOUT FEATURE FOR
CLASS 15 INSTRUMENTS

DRAWING NO.
356360

3

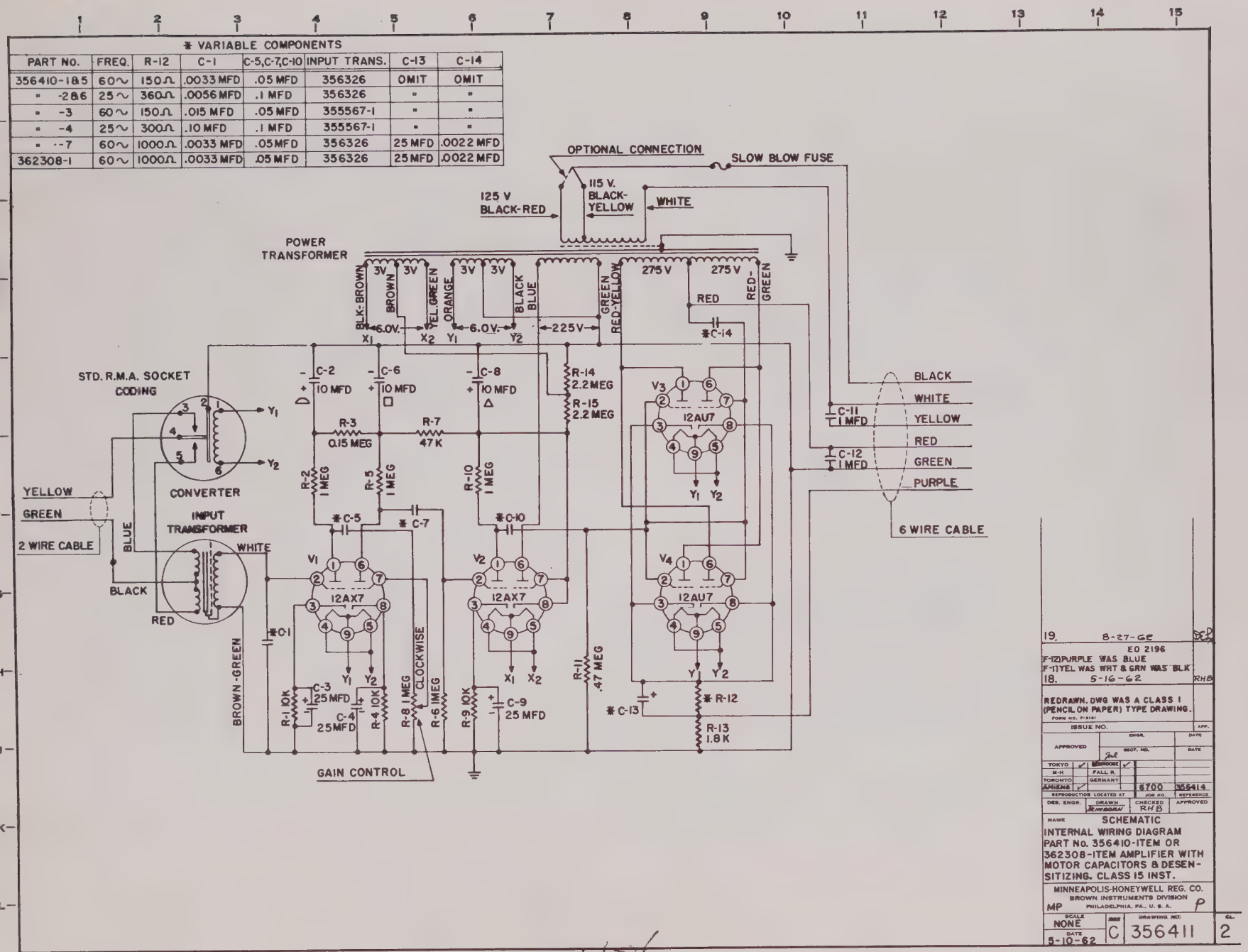


798-605

59191-1

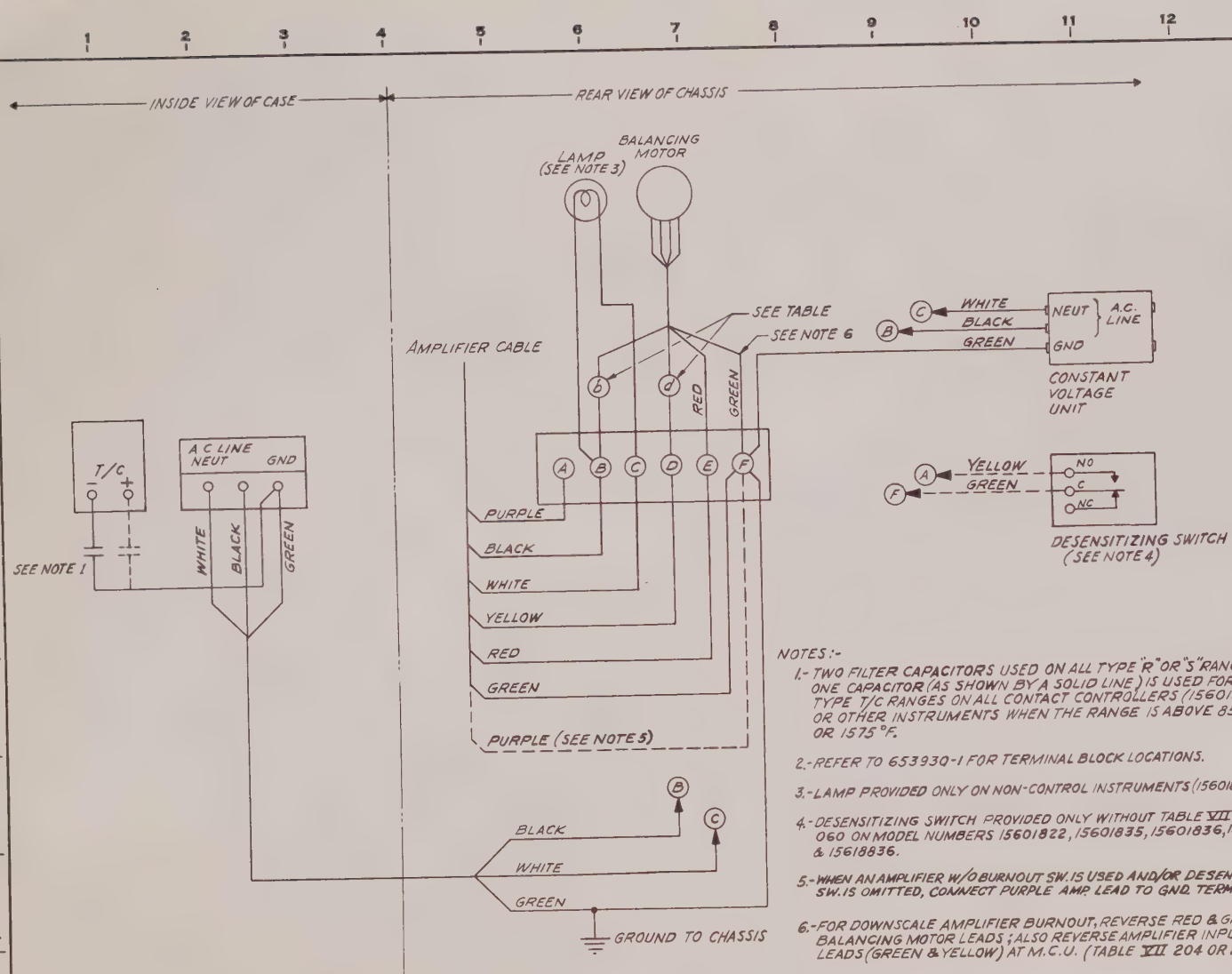


NOTES:-

1.- TWO FILTER CAPACITORS USED ON ALL TYPE "R" OR "S" RANGES. ONE CAPACITOR (AS SHOWN BY A SOLID LINE) IS USED FOR OTHER TYPE T/C RANGES ON ALL CONTACT CONTROLLERS (156013) OR OTHER INSTRUMENTS WHEN THE RANGE IS ABOVE 850°C OR 1575°F.

2.- REFER TO 653930-1 FOR TERMINAL BLOCK LOCATIONS.

3.- LAMP PROVIDED ONLY ON NON-CONTROL INSTRUMENTS (156018, 156188).

4.- DESENSITIZING SWITCH PROVIDED ONLY WITHOUT TABLE VII OPTION 060 ON MODEL NUMBERS 15601822, 15601835, 15601836, 15618835, & 15618836.

5.- WHEN AN AMPLIFIER W/O BURNOUT SW. IS USED AND/OR DESENSITIZING SW. IS OMITTED, CONNECT PURPLE AMP. LEAD TO GND. TERMINAL (F)

6.- FOR DOWNSCALE AMPLIFIER BURNOUT, REVERSE RED & GREEN BALANCING MOTOR LEADS; ALSO REVERSE AMPLIFIER INPUT LEADS (GREEN & YELLOW) AT M.C.U. (TABLE VII 204 OR 205)

| BALANCE SPEED | RANGE | (b) LEAD COLOR | (d) LEAD COLOR |
|---|---|---|---|
| 1 & 2 | NORMAL | WHITE | YELLOW |
| 1 & 2 | REVERSED | YELLOW | WHITE |
| 3 | NORMAL | YELLOW | WHITE |
| 3 | REVERSED | WHITE | YELLOW |

1: 2-19-63 7632-2P

FORM NO F-2145-A

ISSUE NO. APP.

| | | | |
|---|---|---|---|
| APP. FOR RELEASE | ENGR. Krayniak | DATE 3/15/63 | |
| | SECT. HD. J. Luxenburger | DATE 3/15/63 | |
| APP. FOR VENDORS QUOTATION | ENGR | DATE | |
| | SECT. HD. | DATE | |

| a | b | c | d | e | f | g | h | j |
|---|---|---|---|---|---|---|---|---|
| TOKYO | ✓ | NEWHOUSE | ✓ | | | | | |
| M-H | | | | | | | | |
| TORONTO | ✓ | | | | 7632 | | | |
| REPRODUCTION LOCATED AT | | | | | JOB NOS. | | USED ON | |

LIMITS—ON DIMENSIONS WHERE LIMITS ARE NOT SHOWN USE THE FOLLOWING:—
ON ALL DECIMAL DIMENSIONS ± .005
ON ALL OTHER LINEAR DIMENSIONS ±1/64
ANGULAR DIMENSIONS ± 1°

| DES. ENGR. | DRAWN | CHECKED | APPROVED |
|---|---|---|---|
| [illegible] | [illegible] | | |

WIRING DIAGRAM - INTERNAL
MODEL 156
INSTRUMENT POWER CIRCUIT
WITHOUT POWER SWITCH

MINNEAPOLIS-HONEYWELL REG. CO.
BROWN INSTRUMENTS DIVISION
PHILADELPHIA, PA., U. S. A.

SCALE NONE
DATE 2-19-63
DRAWING NO. 371825
CL. 3

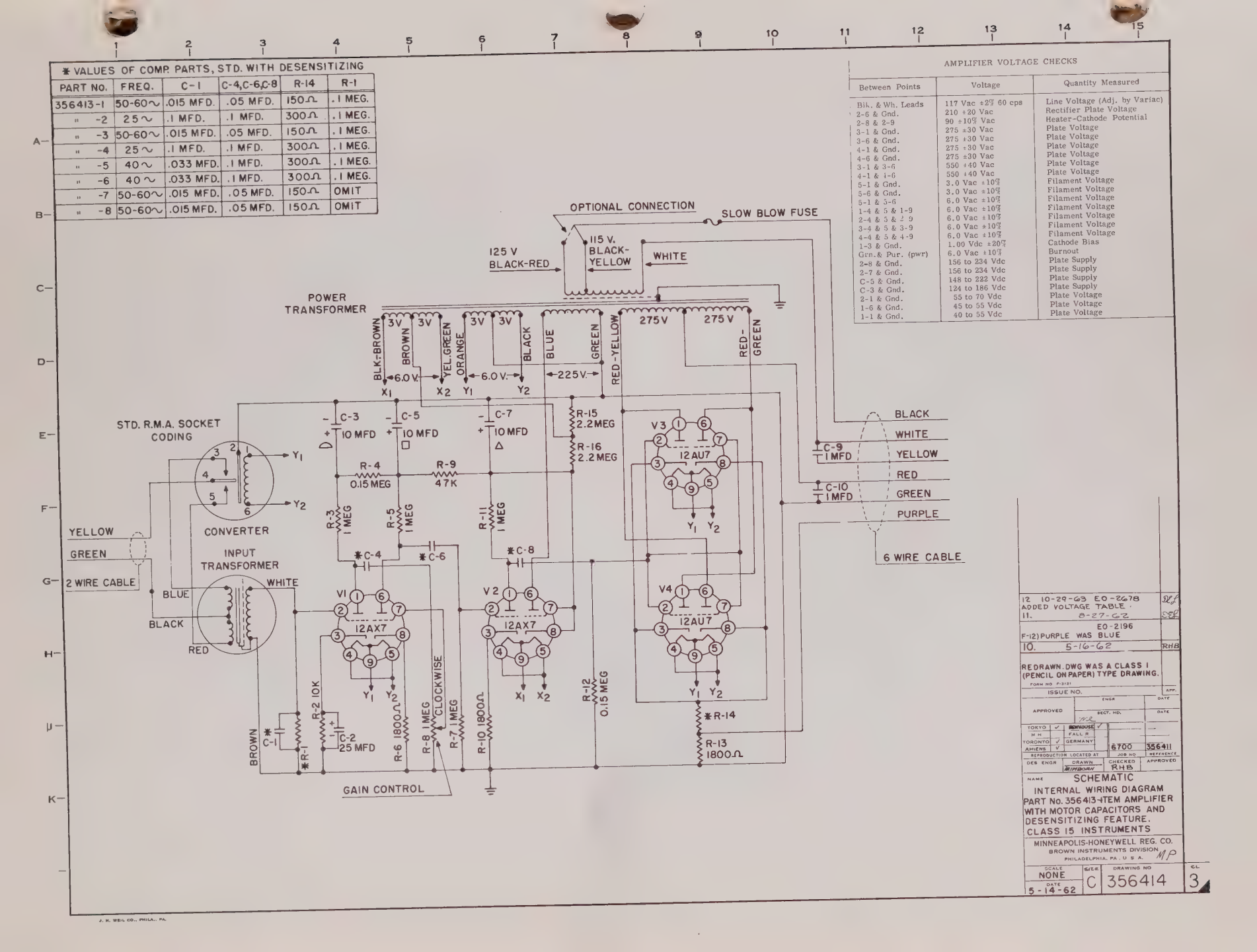
* VALUES OF COMP. PARTS, STD. WITH DESENSITIZING
PART NO. | FREQ. | C-1 | C-4,C-6,C-8 | R-14 | R-1
356413-1 | 50-60~ | .015 MFD. | .05 MFD. | 150Ω | .1 MEG.
" -2 | 25~ | .1 MFD. | .1 MFD. | 300Ω | .1 MEG.
" -3 | 50-60~ | .015 MFD. | .05 MFD. | 150Ω | .1 MEG.
" -4 | 25~ | .1 MFD. | .1 MFD. | 300Ω | .1 MEG.
" -5 | 40~ | .033 MFD. | .1 MFD. | 300Ω | .1 MEG.
" -6 | 40~ | .033 MFD. | .1 MFD. | 300Ω | .1 MEG.
" -7 | 50-60~ | .015 MFD. | .05 MFD. | 150Ω | OMIT
" -8 | 50-60~ | .015 MFD. | .05 MFD. | 150Ω | OMIT
AMPLIFIER VOLTAGE CHECKS
Between Points | Voltage | Quantity Measured
Blk. & Wh. Leads | 117 Vac ±2% 60 cps | Line Voltage (Adj. by Variac)
2-6 & Gnd. | 210 ±20 Vac | Rectifier Plate Voltage
2-8 & 2-9 | 90 ±10% Vac | Heater-Cathode Potential
3-1 & Gnd. | 275 ±30 Vac | Plate Voltage
3-6 & Gnd. | 275 ±30 Vac | Plate Voltage
4-1 & Gnd. | 275 ±30 Vac | Plate Voltage
4-6 & Gnd. | 275 ±30 Vac | Plate Voltage
3-1 & 3-6 | 550 ±40 Vac | Plate Voltage
4-1 & 4-6 | 550 ±40 Vac | Plate Voltage
5-1 & Gnd. | 3.0 Vac ±10% | Filament Voltage
5-6 & Gnd. | 3.0 Vac ±10% | Filament Voltage
5-1 & 5-6 | 6.0 Vac ±10% | Filament Voltage
1-4 & 5 & 1-9 | 6.0 Vac ±10% | Filament Voltage
2-4 & 5 & 2-9 | 6.0 Vac ±10% | Filament Voltage
3-4 & 5 & 3-9 | 6.0 Vac ±10% | Filament Voltage
4-4 & 5 & 4-9 | 6.0 Vac ±10% | Filament Voltage
1-3 & Gnd. | 1.00 Vdc ±20% | Cathode Bias
Grn. & Pur. (pwr) | 6.0 Vac ±10% | Burnout
2-8 & Gnd. | 156 to 234 Vdc | Plate Supply
2-7 & Gnd. | 156 to 234 Vdc | Plate Supply
C-5 & Gnd. | 148 to 222 Vdc | Plate Supply
C-3 & Gnd. | 124 to 186 Vdc | Plate Supply
2-1 & Gnd. | 55 to 70 Vdc | Plate Voltage
1-6 & Gnd. | 45 to 55 Vdc | Plate Voltage
1-1 & Gnd. | 40 to 55 Vdc | Plate Voltage
OPTIONAL CONNECTION
SLOW BLOW FUSE
125 V BLACK-RED
115 V. BLACK-YELLOW
WHITE
POWER TRANSFORMER
BLK-BROWN
3V
BROWN
3V
YEL.GREEN
ORANGE
3V
3V
BLACK
BLUE
GREEN
RED-YELLOW
275V
275V
RED-GREEN
6.0 V.
6.0 V.
225V.
X1
X2
Y1
Y2
STD. R.M.A. SOCKET CODING
C-3 10 MFD
C-5 10 MFD
C-7 10 MFD
R-15 2.2MEG
R-16 2.2MEG
R-4 0.15 MEG
R-9 47K
R-3 1 MEG
R-5 1 MEG
R-11 1 MEG
V3 12AU7
C-9 1 MFD
C-10 1 MFD
BLACK
WHITE
YELLOW
RED
GREEN
PURPLE
6 WIRE CABLE
CONVERTER
YELLOW
GREEN
2 WIRE CABLE
INPUT TRANSFORMER
BLUE
BLACK
RED
WHITE
*C-4
*C-6
*C-8
V1 12AX7
V2 12AX7
V4 12AU7
*R-14
R-13 1800Ω
R-12 0.15 MEG
R-2 10K
*C-1
*R-1
C-2 25 MFD
R-6 1800Ω
R-8 1 MEG
CLOCKWISE
R-7 1 MEG
R-10 1800Ω
BROWN
GAIN CONTROL
12 10-29-63 EO-2678 ADDED VOLTAGE TABLE
11. 8-27-62 EO-2196 F-12) PURPLE WAS BLUE
10. 5-16-62
REDRAWN. DWG WAS A CLASS I (PENCIL ON PAPER) TYPE DRAWING.
NAME SCHEMATIC
INTERNAL WIRING DIAGRAM PART No. 356413-1 ITEM AMPLIFIER WITH MOTOR CAPACITORS AND DESENSITIZING FEATURE. CLASS 15 INSTRUMENTS
MINNEAPOLIS-HONEYWELL REG. CO.
BROWN INSTRUMENTS DIVISION
PHILADELPHIA, PA., U.S.A.
SCALE NONE
DATE 5-14-62
SIZE C
DRAWING NO 356414
SH. 3

## 1. GENERAL

**a. FUSE.** If instrument fails to operate:

(1) Check fuse with ohmmeter.

(2) If defective, install a new 1-ampere Slo-Blo* fuse. Check elsewhere for source of trouble if replacement fuse burns out.

CAUTION: Switch instrument power off before replacing fuse.

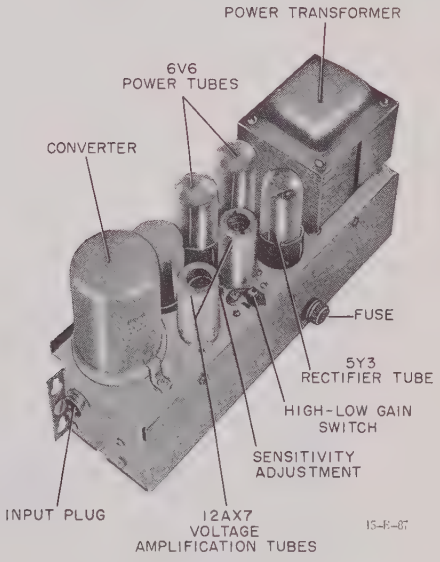


Figure 1. Front View of Amplifier

**b. TUBES.**

(1) Refer to tube location diagram on amplifier cover for tube arrangement. Check tubes as follows:

(a) Switch instrument power off and allow tubes to cool.

(b) Remove a tube shield by depressing it, turning it counterclockwise, and lifting it.

(c) Remove tubes with a straight upward pull.

(d) Check tubes on any standard tube checker. Replace weak or defective tubes and readjust amplifier sensitivity (refer to Calibration Service Section).

(2) Amplifier tubes may be obtained from Honeywell, Brown Instruments Division or from any electrical equipment supply store. Specify:

*Trademark – Littlefuse, Inc.

| STANDARD TUBE DESIGNATION | BROWN INSTRUMENT PART NUMBER |
|---|---|
| 12AX7; voltage amplifier | 353308-2 |
| 6V6; power amplifier | 361924 |
| 5Y3; rectifier tube | 353570 |

## 2. TROUBLESHOOTING

**a. REMOVAL.** The amplifier has a quick-disconnect plug and Dzus fasteners to facilitate removal.

(1) Disconnect input cable plug from amplifier.

CAUTION: Support amplifier while performing step (2) below.

(2) Turn Dzus fasteners on each side of amplifier (fig. 2) about one-quarter turn counterclockwise; remove amplifier.

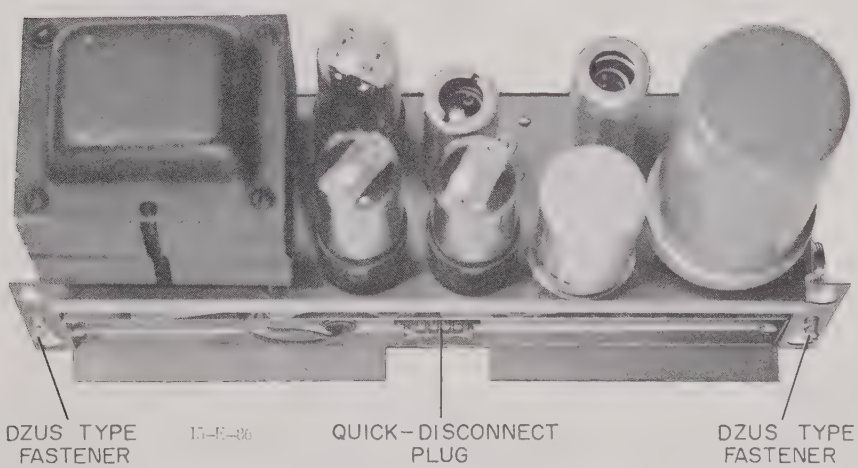


Figure 2. Rear View of Amplifier

**b. RESISTANCE CHECKS.** With amplifier removed from instrument and converter and tubes removed from their sockets, check for various resistances specified on the amplifier schematic diagram.

**c. VOLTAGE CHECKS.** Replace tubes and converter, energize amplifier. Refer to amplifier schematic and make voltage checks in the following table. Where two numbers are separated by a dash in the first column, the first number is the tube or converter number ("1" for V1, etc.); the second number is the number of the terminal on the tube socket.

**d. REINSTALLATION**

(1) Turn Dzus fasteners until their slots are approximately horizontal.

(2) Mate plug on back of amplifier (fig. 2) with plug in back of instrument case.

(3) Turn Dzus fasteners clockwise; make sure they are secure.

| Between Points | Voltage in Volts | Quantity Measured |
|---|---|---|
| Black & White leads | 117 Vac. ±2% 60 cy. AC | Line Voltage. Adjust to Proper Value by Variac |
| 5-8 & Gnd | 350 ±20 Volts D.C. | Rectifier D.C. Output |
| 5-6 & Gnd | 340 ±10 Volts A.C. | Rect. Plate Voltage |
| 5-4 & Gnd | 340 ±10 Volts A.C. | Rect. Plate Voltage |
| 6-1 & Gnd | 3.00 ±10% V.A.C. | Filament Voltage |
| 6-6 & Gnd | 3.00 ±10% V.A.C. | Filament Voltage |
| 6-1 & 5-6 | 6.2 ±10% V.A.C. | Filament Voltage |
| 1-4 & 5 & 1-9 | 6.2 ±10% V.A.C. | Filament Voltage |
| 2-4 & 5 & 2-9 | 6.2 ±10% V.A.C. | Filament Voltage |
| 4-2 & 7 | 6.2 ±10% V.A.C. | Filament Voltage |
| 5-4 & 7 | 6.2 ±10% V.A.C. | Filament Voltage |
| 1-3 & Gnd | 1.0 ±20% D.C. | Cathode Bias |
| 1-7 & Gnd | 0 D.C. | Grid Bias |
| 2-7 & Gnd | 0 D.C. | Grid Bias |
| C-8 & Gnd | 320 D.C. ±20 | Plate Supply |
| C-2 & Gnd | 200 D.C. ±20 | Plate Supply |
| 2-6 & Gnd | 140 D.C. ±20 | Plate Voltage |
| 1-6 & Gnd | 90 D.C. ±20 | Plate Voltage |
| 1-1 & Gnd | 85 D.C. ±20 | Plate Voltage |
| 1-2 & Gnd | 0 D.C. | Grid Voltage |
| 1-8 & Gnd | 1.0 ±20% D.C. | Cathode Bias |
| 2-8 & Gnd | 1.0 ±20% D.C. | Cathode Bias |
| 5-2 & 4-8 | 5.0 ±10% V.A.C. | Rectifier Filament Voltage |
| 2-1 to Gnd | 170 Volts D.C. ±20 | Plate Voltage |
| 2-3 to Gnd | 150 Volts D.C. ±20 | Cathode Voltage |
| 3-3 to Gnd | 330 Volts D.C. ±10 | Plate Voltage |
| 4-3 to Gnd | 320 Volts D.C. ±10 | Plate Voltage |
| 3-4 to Gnd | 340 Volts D.C. ±10 | Screen Voltage |
| 4-4 to Gnd | 330 Volts D.C. ±10 | Screen Voltage |
| 4-8 to Gnd | 20 Volts D.C. ±1 | Cathode Bias |

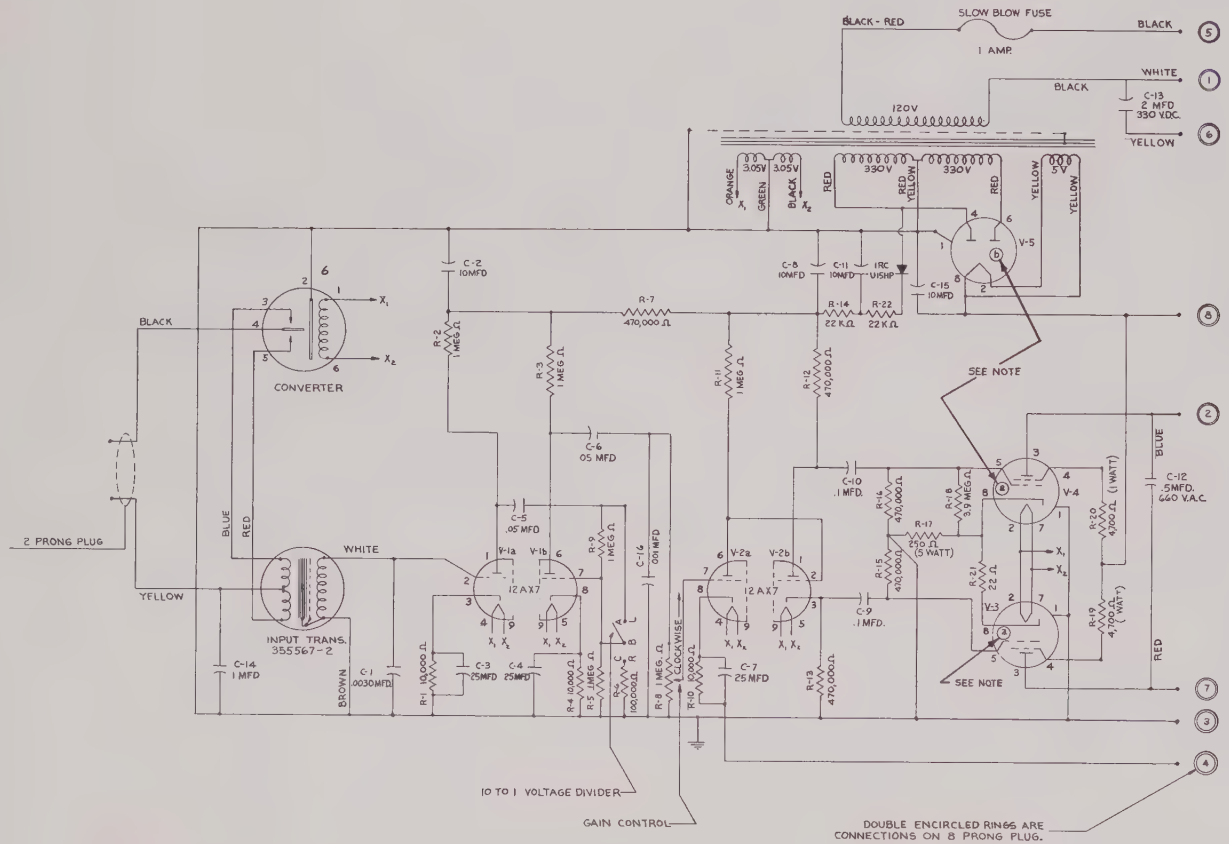


NOTE - TUBE IDENTITIES ARE AS FOLLOWS:
ⓐ 6V6 OR 5881
ⓑ 5Y3 OR 524

| REVISION | APP. |
|---|---|
| INTERNAL WAS 3 1/2 D A-3 ADD, 6 JE-11 ADD, V-3 A-101 120Y WAS 115 V. A-5 ADD, V-1B & V-1A A-49 ADD, V-2B & V-2A. F-71 ADD Y-90M-R ADD V-3 11-9-5-53 80-2510 | |

HONEYWELL
BROWN INSTRUMENTS DIVISION
PHILADELPHIA, PA. U.S.A.
MP

INTERNAL WIRING DIAGRAM
PART NO. 361925
HIGH SPEED CL. 15 INSTRUMENT

| | |
|---|---|
| DRAWN | JWO 8-8-43 |
| ENGR. | R.L.L. |
| SUPV. | |
| JOB | 4990 |
| SIZE | D |
| DRAWING NO. | 361939 |
| CL. | 1 |

**AMPLIFIER** **SERVICE**

## 1. GENERAL

**a. Fuse.** The amplifier fuse is on top of the amplifier chassis. If the instrument fails to operate:

(1) Check the fuse

(2) If the fuse is defective, install a new 1/2-ampere Slo-Blo* fuse. Check elsewhere for the source of trouble if the replacement fuse burns out.

NOTE: Do not replace the fuse with the instrument energized; switch the instrument power off.

**b. Tubes.** Refer to the tube location diagram on the amplifier cover for the correct tube arrangement. Check tubes as follows:

(1) Switch the instrument power off and allow the tubes to cool.

(2) To remove a tube shield, depress the shield, turn it counterclockwise, and lift it from the tube.

(3) Remove tubes with a straight upward pull.

(4) Check tubes on any standard tube checker. Replace weak or defective tubes, and readjust the amplifier sensitivity setting.

NOTE: The 12AX7 tubes may be obtained from Brown Instrument Division, or from any electronic equipment supply store. It is recommended, however, that the 12BH7 and 7025 tubes be obtained only from Brown Instrument Division, where they are tested and selected for particular operating characteristics. The standard designation is marked on each tube; specify:

| STANDARD TUBE DESIGNATION | BROWN INSTRUMENT PART NUMBER |
|---|---|
| 12AX7; voltage amplifier | 353308-2 |
| 12BH7; power amplifier | 353308-3 |

## 2. EMERGENCY OPERATION

**a.** The two power tubes are connected so that it is possible to operate the instrument (with decreased sensitivity) on just one power tube. It is necessary, however, for the two voltage tubes to be operative for the instrument to function. In an emergency a 12BH7 power tube can be substituted for either 12AX7 voltage tube. This arrangement keeps the loss in sensitivity to a minimum.



* Trademark - Littlefuse Inc.

**b.** If tube substitutions are made, readjust the amplifier for maximum sensitivity before placing the instrument back in service. Install the replacement tubes as soon as possible.

## 3. SENSITIVITY ADJUSTMENT

**a.** Amplifier sensitivity is adjusted by means of a variable resistor on top of the amplifier chassis.

**b.** Turn the adjustment clockwise (increase sensitivity) until the pen oscillates; reduce sensitivity (turn adjustment counter clockwise) until oscillation just stops.

**c.** Check at several points on the scale to be sure there is no oscillation at any position.

## 4. TROUBLESHOOTING

**a. General.** If an amplifier malfunction is isolated as the cause of instrument failure, and if the performance of routine maintenance fails to identify the malfunction, service the amplifier as described below.

**b. Removal.**

(1) Loosen the amplifier mounting screws.

(2) Remove the retaining screws located above the amplifier mounting screws.

(3) Disconnect the amplifier input cable from the terminals marked G, Y, and X on the measuring circuit panel.

(4) Disconnect the amplifier power cable connector.

(5) Lift the amplifier vertically about 1/4 of an inch to disengage the mounting brackets; then pull straight out.

**c. Resistance Checks**

With the amplifier removed from the instrument and the tubes removed from their sockets, check the resistance values specified on the amplifier schematic diagram included in this manual.

**d. Voltage Checks**

Replace the tubes, energize the amplifier, and make the voltage checks specified on the amplifier schematic diagram.

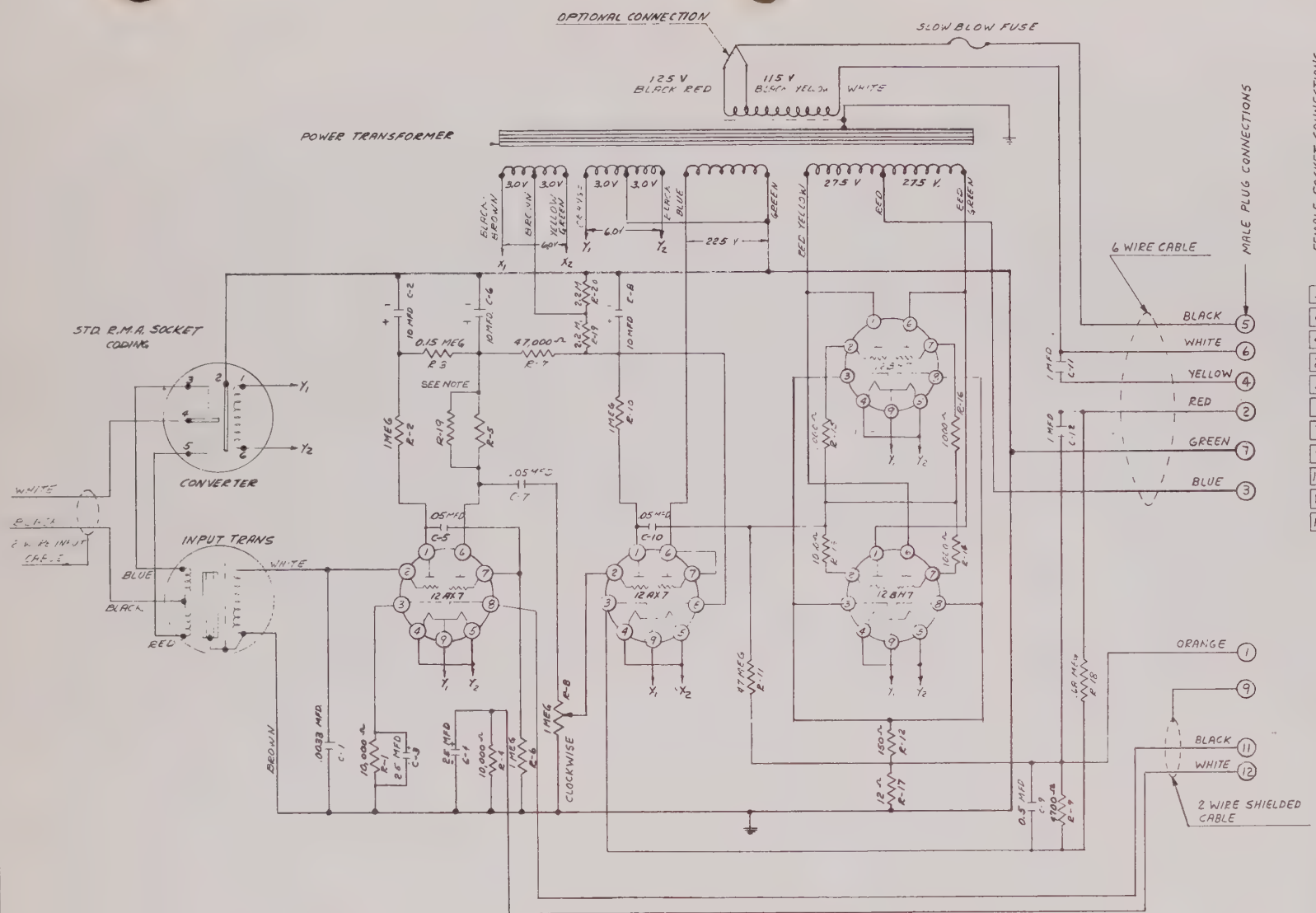


| POWER TRANSFORMER WINDING | | | | |
|---|---|---|---|---|
| VOLTAGE | FREQ. | PRIMARY RESISTANCE | TOTAL HIGH VOLTAGE SECONDARY RESISTANCE | RECTIFIER SECONDARY RESISTANCE |
| 125 V | 50 60~ | 75 Ω | 610 Ω | 440 Ω |

NOTE: R5 & R19 VALUES VARY ACCORDING TO TABLE BELOW:

| AMPLIFIER | R-5 | R-19 | RANGE |
|---|---|---|---|
| 48-R-11-1 | .47 MEG. | .47 MEG. | 0-1 0-21 MV |
| " -2 | 1 " | OMIT | 0-5 0-55 MV |
| " -3 | .47 " | .15 MEG | 0-1 0-5 MV |

ENG. REF. DWG. 701091

NOTE: [illegible] DEVICES EXTERNAL TO [illegible] ARE NOT FURNISHED [illegible] INST. UNLESS SPECIFIED [illegible] CUSTOMERS ORDER.

4 8-10-61
REV'D WIRING; ADDED R-19 & NOTE
3. 6-2-56
C.S. 5779
REM. "BROWN" FROM SHIELD LEADS
2. 3-8-56
C.S. 5566
F-13 ADDED JUMPER FROM 7 TO 9 IN PLUG CONNECTION
F-7 ADDED JUMPER FROM 6 TO 7 IN 12AX7 TUBE
E-5 .05 MFD. WAS 1 MFD.
H-5 REV. WIRING FROM 3 WIRE CABLE
1. 2-17-56
FORM NO. F-2148

| ISSUE NO. | | | | APP. |
|---|---|---|---|---|
| M-H | | | | |
| TORONTO | | | | |
| LONDON | | | | 48-R-11 |
| REPRODUCTION LOCATED AT | | JOB NOS. | | USED ON |

LIMITS—ON DIMENSIONS WHERE LIMITS ARE NOT SHOWN USE THE FOLLOWING —
ON ALL DECIMAL DIMENSIONS ± .002
ON ALL OTHER LINEAR DIMENSIONS ± .010
ANGULAR DIMENSIONS ± 1°

| PROJ. ENGR | DRAWN | CHECKED | APPROVED |
|---|---|---|---|
| T. W. | L.W.S. | | |

SCHEMATIC WIRING DIAGRAM FOR AMPLIFIER WITH VELOCITY DAMPING SINGLE RECORD STRIP CHART POTENT. 1/2 SEC. PEN SPEED ADJUSTABLE SPAN ADJUSTABLE ZERO

MINNEAPOLIS-HONEYWELL REG. CO.
BROWN INSTRUMENTS DIVISION
PHILADELPHIA, PA., U. S. A.

SCALE
DATE 2-14-56
DRAWING NO. 48-R-11-A

**AMPLIFIER** **SERVICE**

## 1. GENERAL.

**a. FUSE.** If the instrument fails to operate:

(1) Switch off instrument power. Check fuse (on top of amplifier chassis).

(2) If fuse is defective install a new 1/2 ampere Slo Blo* fuse. Check elsewhere for source of trouble if replacement fuse burns out.

NOTE: Do not replace the fuse with instrument energized.

**b. TUBES.** Refer to tube location diagram on amplifier cover for correct tube arrangement. Always keep a replacement set of tubes available. Check tubes as follows:

(1) Switch instrument power off and allow tubes to cool.

(2) Depress, turn counterclockwise, and lift tube shields from tubes.

(3) Remove tubes with a straight upward pull.

(4) Check tubes on any standard tube checker. Replace those that are weak or defective.

(5) Readjust amplifier gain.

## 2. EMERGENCY OPERATION

**a.** The two power tubes are connected in parallel; the instrument can be operated (with decreased gain) on just one power tube. However, both voltage tubes must be operative for the instrument to function. In an emergency a 12BH7 power tube can be substituted for a 12AX7 voltage tube, a 12AX7 can be substituted for the 7025 voltage tube, or a 7025 can be substituted for the 12AX7. This arrangement keeps deadband to a minimum.

**b.** If tube substitutions are made, readjust amplifier for maximum gain before placing instrument back in service. Install replacement tubes as soon as possible.

## 3. GAIN ADJUSTMENT (SENSITIVITY)

**a.** Amplifier gain is adjusted by means of a variable resistor accessible from top of amplifier chassis.

**b.** Turn adjustment clockwise (increase gain until the recording device oscillates; reduce gain (turn adjustment counterclockwise) until oscillation just stops.

**Trademark – Littlefuse, Inc.*

c. Check at several points on scale to be sure there is no oscillation at any position.

## 4. TROUBLESHOOTING

**a. GENERAL** If amplifier malfunction is isolated as cause of instrument failure, and if routine maintenance fails to correct it, service amplifier as described below.

**b. REMOVAL.**

(1) Loosen amplifier mounting screws.

(2) Remove retaining screws (installed above amplifier mounting brackets).

(3) Disconnect amplifier input cable (and shield) from terminals marked G, Y, and X on measuring circuit panel.

(4) Disconnect amplifier power cable connector.

(5) Lift amplifier vertically about 1/4 inch to disengage mounting brackets; then pull straight out.

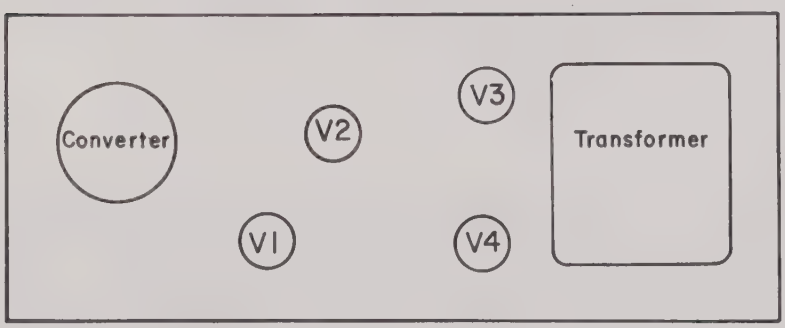


Figure 1. Amplifier, component location diagram.

**c. VOLTAGE CHECKS.**

(1) Energize the amplifier, and check for approximate voltages shown on amplifier schematic. Tube locations are shown in figure 1.

(2) Values on schematic are based on a meter having an impedance of 1000 ohms per volt ac and 20,000 ohms per volt dc.

**d. RESISTANCE CHECKS.** Remove amplifier from instrument and remove converter and tubes from their sockets. Check that resistance values in each stage agree with the schematic diagram.

| POWER TRANSFORMER WINDING | | | | |
|---|---|---|---|---|
| VOLTAGE | FREQ | PRIMARY RES | TOTAL HIGH VOLTAGE SECONDARY RES | RECTIFIER SECONDARY RESISTANCE |
| 125 V | 50-60 ~ | 7.5 Ω | 610 Ω | 440 Ω |

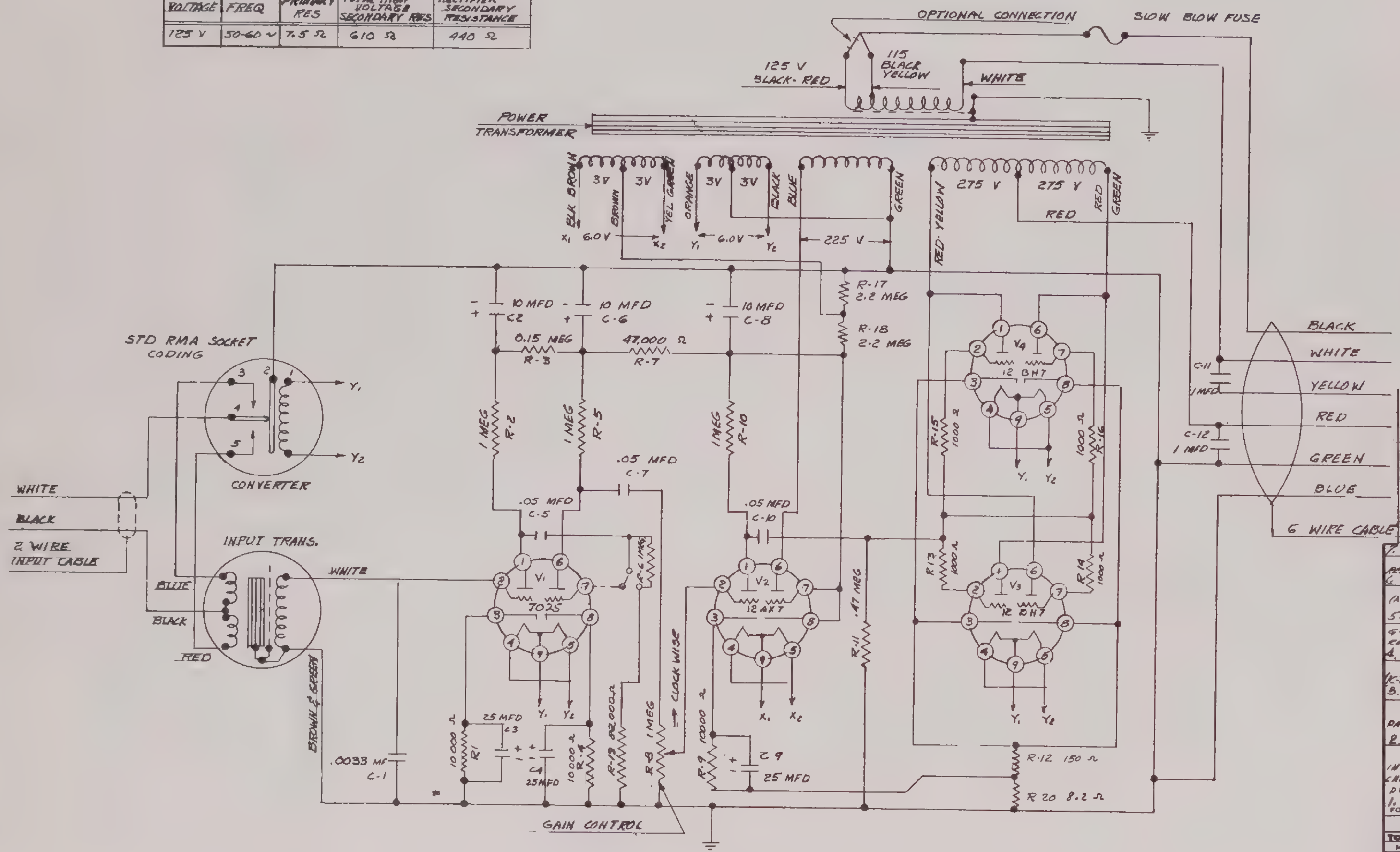


| PART NO | FREQ | R-12 | C-1 | C-5, C-7, C-10 |
|---|---|---|---|---|
| 360495-1 | 50-60 ~ | 150 Ω | 0.0033 MFD | 0.05 MFD |

8. 2-23-61 EC4020-1265 (G-5) 7025 (WAS 12AX7)
7. 7-20-60 ER 4020-982 ADD'D 1 MFD CAPACITOR (H-2)
6. 2-13-56 ER-6338-1 (A-9) 25V OPTIONAL CONNECTION & CHANGED 110V TO 115V
5. 6-6-55 ER-6506-65 G-6 ADDED SWITCH RELOCATED R-6, ADDED R-13
4. 11-16-54 ER 3351-1 (K-2) ADDED "-2" TO PART NO.
3. 6-18-54 ER 3019-1 PART NO. WAS 360945-1
2. 3-19-54 E.R. 6881-4 INTABLE 360965-1 WAS 357926-1 CHG. NUMBERING OF TUBES DWG. WAS 23-X-11-T
1. 11-18-53

FORM NO. F-2148

ISSUE NO. — TOKYO ✓ AMIENS ✓ — TORONTO ✓ — LONDON ✓ 11-7-61 6881

REPRODUCTION LOCATED AT / JOB NOS. / USED ON

LIMITS—ON DIMENSIONS WHERE LIMITS ARE NOT SHOWN USE THE FOLLOWING:— ON ALL DECIMAL DIMENSIONS ± .005 ON ALL OTHER LINEAR DIMENSIONS ± .010 ANGULAR DIMENSIONS ± 1°

PROJ ENGR. MILLER — DRAWN — CHECKED — APPROVED

# WIRING DIAGRAM

INTERNAL WIRING DIAGRAM PART NO. 360495-ITEM AMPLIFIER WITH MOTOR CAP FOR CL 15 INSTRUMENTS

MINNEAPOLIS-HONEYWELL REG. CO.
MP BROWN INSTRUMENTS DIVISION PHILADELPHIA, PA., U.S.A.

SCALE 2 — DATE 11-10-53 — DRAWING NO. 360493

| VOLTAGE | FREQ. | TRANSFORMER WINDING PRIMARY RES. | TOTAL HIGH VOLTAGE SECONDARY RES. | RECTIFIER SECONDARY RES. |
|---|---|---|---|---|
| 125 V | 50-60 ~ | 7.5 Ω | 610 Ω | 440 Ω |

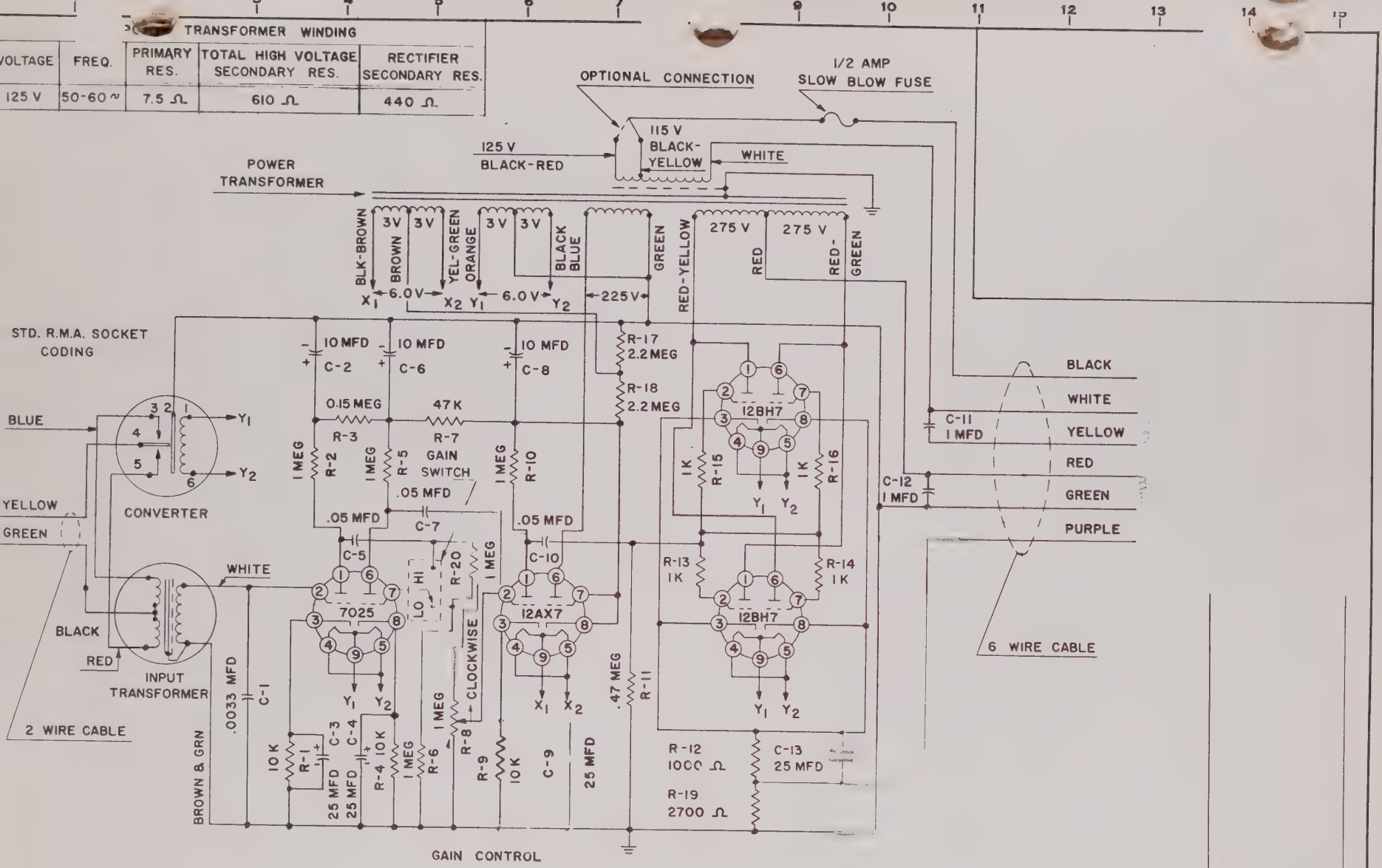


| PART NO. | FREQ. | GAIN SWITCH POSITION | EQUIVALENT MV SPAN |
|---|---|---|---|
| 00564-5 | 50-60 ~ | HI | UP TO 12 MV |
| | | LO | ABOVE 12 MV |

3.

REDRAWN EO 2196
F-12) PURPLE WAS BLUE
F-1) YEL WAS WH & GRN WAS BLK
FORM NO F-21-B-B

ISSUE NO. | APP

APPROVED | ENGR | DATE | SECT. HEAD | DATE

a b c d e f g h i

NAME SCHEMATIC
INTERNAL WIRING DIAG AMPL WITH MOTOR CAP. 9 DESENSITIZING FOR CL.15 INSTRUMENTS

LIMITS—ON DIMENSIONS WHERE LIMITS ARE NOT SHOWN USE THE FOLLOWING:-
ON ALL DECIMAL DIMENSIONS ± .005
ON ALL OTHER LINEAR DIMENSIONS ± 1/64
ANGULAR DIMENSIONS ± 1°

SPEC. NO. | MATERIAL | FINISH

SCALE NONE | JOB NO | USED ON 700564 | REFERENCE 700598
DRAWN LWS 8-21-62 | ENGR | CHECKED | MAT. CHK

REPRODUCTION LOCATED AT: M H, FALL RIVER, TORONTO, GERMANY, LONDON, TOKYO, NEWHOUSE ✓

MINNEAPOLIS-HONEYWELL REG. CO.
BROWN INSTRUMENTS DIVISION
PHILADELPHIA, PA., U. S. A.

SIZE C | DRAWING NO 366961 | 2

J. H. WEIL CO., PHILA., PA.

(5) If the contactors are not correctly aligned, proceed as follows:

(a) Loosen the knurled screw and raise the slidewire compartment cover

(b) Loosen the two screws which hold the contactor assembly to the pen carriage and reposition the contactor assembly as required. Repeat steps (2) and (3) above.

c. Check the instrument zero adjustment.

## 1. SERVICE NOTES

**a.** If the instrument is erratic in operation and the pen jitter cannot be eliminated with proper adjustment of instrument sensitivity, a dirty or damaged slidewire may be suspected. A small amount of random motion at the motor pinion is normal and satisfactory. This is caused by a dither signal which should not, however, produce pen motion. The erratic motion may show up as random noise and may extend over as much as 20% of scale peak to peak.

**b.** Examination of the slidewire and contactor may indicate that the slidewire should be replaced. Look for excessive wear of the contactor. This will indicate a rough spot on the slidewire or a loose or distorted convolution. If none of the above causes are detectable and the erratic pen motion still persists, clean the slidewire as described below. If operation is not improved, replace the slidewire and contactor.

## 2. CLEANING

Clean the slidewire when required. To gain access to the slidewire loosen the knurled knob on the slidewire housing and swing the entire compartment up. Clean the slidewire with naphtha or a lead-free gasoline. Use a stiff bristle brush to clean between the slidewire convolutions. Oiling of the slidewire is not recommended.

WARNING: Good ventilation and adequate precaution are essential when using inflammable, volatile cleaning agents.

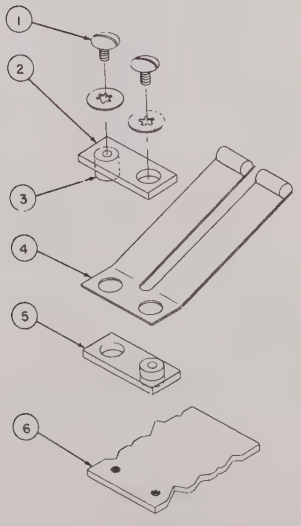


36-E-17-2A

Figure 1. Assembly of Slidewire Contactors

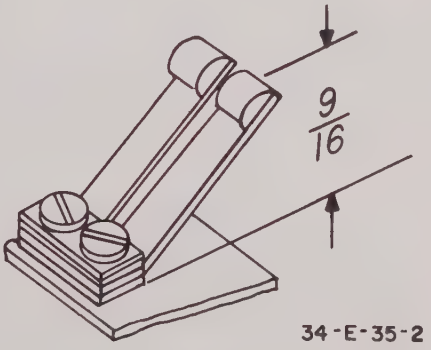


Figure 2. Slidewire Contactor

LEGEND

1. RETAINING SCREWS
2. UPPER INSULATOR
3. INSULATOR SLEEVE
4. CONTACTOR ASSEMBLY
5. LOWER INSULATOR
6. CARRIAGE ASSEMBLY

## 3. REPLACING CONTACTOR ASSEMBLY

**a.** If the slidewire contactor assembly is severely worn, replace the assembly as follows:

(1) Remove the two screws which secure the contactor assembly to the pen carriage.

(2) Retain the insulating sleeves from around each screw and the two bakelite insulator strips. Discard the worn assembly.

(3) Reassemble the insulators with the new contactor assembly.

CAUTION: When reassembling, be sure that the two insulator sleeves are correctly placed around the screws and through the holes in the insulator strips and the contactor assembly. Incorrect reassembly may ground out the feedback signal and make the instrument inoperative. (Refer to figure 1).

(4) Attach the contactor assembly to the pen carriage and tighten the two screws.

**b.** Check the contactor pressure and adjust if necessary, as described in the following paragraph.

## 4. ADJUSTING CONTACTOR PRESSURE

**a.** Measure the distance between the top of the contactors and the surface of the pen carriage, as shown in fig. 2. Correct pressure of the contactors on the slidewire will be obtained when this distance is 9/16". If necessary carefully bend the spring arms of the contactors to obtain the correct distance.

**b.** Check the alignment of the contactors as follows:

(1) Close the slidewire compartment cover and tighten the knurled screw.

(2) Set the pen carriage at the middle of the scale.

(3) The contactors are correctly aligned when the slidewire and the collector touch the contactors at the middle of the contactor surfaces.

(4) Set the pen carriage successively at each end of the scale. As the pen carriage is moved to each of these positions, the point of contact should move across the face of the contactors.

## 1. SERVICE NOTES

**a.** If the instrument is erratic in operation and the pen jitter cannot be eliminated with proper adjustment of instrument sensitivity, a dirty or damaged slidewire may be suspected. A small amount of random motion at the motor pinion is normal and satisfactory. This is caused by a dither signal which should not, however, produce pen motion. The erratic motion may show up as random noise and may extend over as much as 20% of scale peak to peak.

**b.** Examination of the slidewire and contactor may indicate that the slidewire should be replaced. Look for excessive wear of the contactor. This will indicate a rough spot on the slidewire or a loose or distorted convolution. If none of the above causes are detectable and the erratic pen motion still persists, clean the slidewire as described below. If operation is not improved, replace the slidewire and contactor.

## 2. CLEANING

Clean the slidewire when required. To gain access to the slidewire loosen the knurled knob on the slidewire housing and swing the entire compartment up. Clean the slidewire with naphtha or a lead-free gasoline. Use a stiff bristle brush to clean between the slidewire convolutions. Oiling of the slidewire is not recommended.

WARNING: Good ventilation and adequate precaution are essential when using inflammable, volatile cleaning agents.

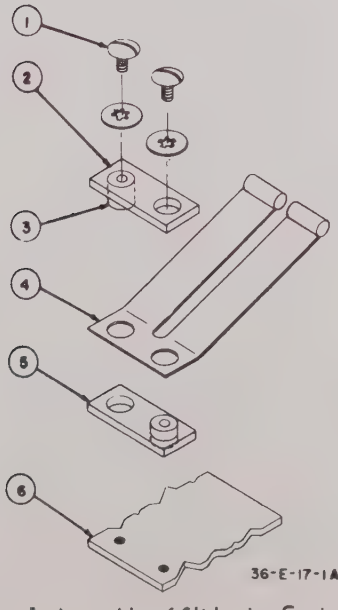


Figure 1. Assembly of Slidewire Contactors

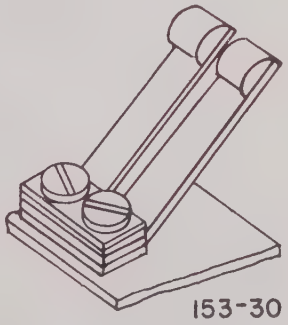


Figure 2. Slidewire Contactor

LEGEND

1. RETAINING SCREWS
2. UPPER INSULATOR
3. INSULATOR SLEEVE
4. CONTACTOR ASSEMBLY
5. LOWER INSULATOR
6. CARRIAGE ASSEMBLY

## 3. REPLACING CONTACTOR ASSEMBLY

**a.** If the slidewire contactor assembly is severely worn, replace the assembly as follows:

(1) Remove the two screws which secure the contactor assembly to the pen carriage.

(2) Retain the insulating sleeves from around each screw and the two bakelite insulator strips. Discard the worn assembly.

(3) Reassemble the insulators with the new contactor assembly.

CAUTION: When reassembling, be sure that the two insulator sleeves are correctly placed around the screws and through the holes in the insulator strips and the contactor assembly. Incorrect reassembly may ground out the feedback signal and make the instrument inoperative. (Refer to figure 1).

(4) Attach the contactor assembly to the pen carriage and tighten the two screws.

**b.** Check the contactor pressure and adjust if necessary, as described in the following paragraph.

## 4. ADJUSTING CONTACTOR PRESSURE

**a.** If damping and gain adjustments continually result in an overdamped or underdamped condition, adjust the contactor arms for optimum contact pressure. If the instrument is overdamped, gently bend the contactor arms away from the slidewire; if the instrument is underdamped, gently bend the contactor arms toward the slidewire.

**b.** Check the alignment of the contactors as follows:

(1) Close the slidewire compartment cover and tighten the knurled screw.

(2) Set the pen carriage at the middle of the scale.

(3) The contactors are correctly aligned when the slidewire and the collector touch the contactors at the middle of the contactor surfaces.

(4) Set the pen carriage successively at each end of the scale. As the pen carriage is moved to each of these positions, the point of contact should move across the face of the contactors.

SLIDEWIRE SERVICE

## 1. CLEANING

**a.** Turn off the instrument power.

**b.** Unfasten the two bails which hold the slidewire cover and remove the cover.

**c.** Lift the contact guide away from the drum and allow the contactor to drop into your hand.

**d.** Clean the slidewire with naphtha or lead-free gasoline. Use a stiff-bristle brush and scrub briskly with vertical strokes to clean between the slidewire convolutions.

WARNING: Good ventilation and adequate precaution are essential when using inflammable, volatile cleaning agents.

**e.** Replace contactor. Check operation of contactor before replacing slidewire cover.

## 2. REPLACING AND CHECKING THE CONTACTOR

With the power off, run the contactor through several cycles to make certain it is operating properly. (Contactor should rotate about its own axis as contact carrier arm is moved around the drum.) If it does not, install a new contactor (a spare is included in the accessories supplied with the instrument) and check in the same manner.

**a.** Turn the large spur gear clockwise (motor pinion counterclockwise) to the end of its travel.

**b.** Place the shaft of the contactor in the small hole in the end of the key (Figure 1).

**c.** Slip the contactor under the contact guide slot in the top turn of the slidewire and gently remove the key.

**d.** Turn guide arm several revolutions. Contactor must not wobble but must rotate freely on axis. Adjust pressure by bending contact guide arm.

**e.** If the contactor operates properly, replace the slidewire cover. Make sure the cover gasket is in place.

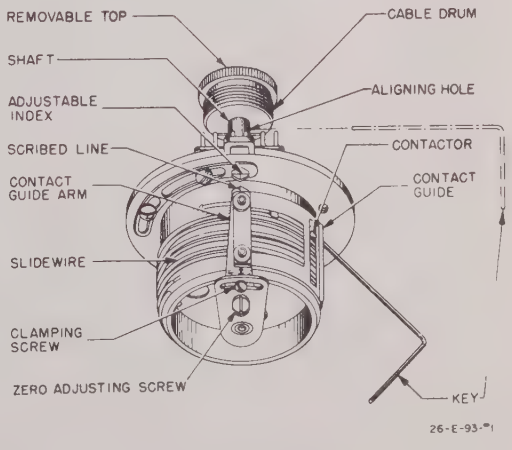


Figure 1. Helical Slidewire

643-0018-152

## 3. OIL IMMERSION

**a.** Best results are usually obtained with the slidewire operating dry, as supplied. Do not immerse it in oil unless experience proves this necesary.

**b.** Under some conditions, oil immersion may provide some protection against corrosion and dirt. Many corrosive atmospheres, however, permeate immersion oils and hasten contamination of the slidewire. Excessively dirty atmospheres tend to gum some oils quickly, making frequent cleaning and reimmersion necessary. In such applications purging the instrument case with air or inert gas may prove a better solution.

**c.** If necessary, the slidewire can be immersed in oil as described below. An initial supply of the recommended immersion oil can be obtained from Brown Instruments Division free of charge. Substitutes are usually unsatisfactory.

(1) Clean the slidewire as previously described.

(2) Fill slidewire cover to oil level line with immersion oil.

(3) Replace cover carefully to avoid spilling oil (make sure cover gasket is in place).

NOTE: Always discard used immersion oil and replace it with new oil whenever the slidewire is cleaned. Otherwise, the slidewire will quickly become inoperative from contamination by the used oil.

(5) If the contactors are not correctly aligned, proceed as follows:

(a) Loosen the knurled screw and raise the slidewire compartment cover

(b) Loosen the two screws which hold the contactor assembly to the pen carriage and reposition the contactor assembly as required. Repeat steps (2) and (3) above.

c. Check the instrument zero adjustment.

## 1. DISASSEMBLY

The induction motor, shown in Figure 1, consists of five major sub-assemblies; namely, the gear housing assembly (3), the front bearing housing assembly (9), the armature assembly (10), the stator assembly (11), and the rear housing (15). To disassemble proceed as follows:

a. Remove the two assembly screws (1) and the related washers (17) and nuts (18).

b. In the sequence specified, lift off the gear housing, the front bearing housing, the armature, and the stator assembly.

c. The motor has been broken down as far as will normally be necessary for replacement of defective parts or for cleaning or lubrication of the motor.

d. If it is ever necessary to disassemble the sub-assemblies special tools will be required; order the motor tool kit available under Brown part number 364950.

e. The reassembly procedures will be the reverse of disassembly; the sub-assemblies are designed for easy assembly and alignment.

## 2. INSPECTION

a. Inspect all metal parts for cracks or excessive wear; replace all defective parts.

b. Inspect gear teeth for defects such as chipping and galling; replace defective gears.

c. Inspect bearings for dirt, and for side and end play. A slight amount of end play is permissible, but not more than 0.020 inch axial motion. Replace bearings if found defective or noisy.

d. Inspect stator field coils for traces of overheating or shorting, shown by discoloration or actual burn marks on the coil. If necessary, replace field coil assembly.

## 3. CLEANING

a. All metal parts (except ball bearings or needle bearings) can be cleaned with dry-cleaning solvent.

LEGEND

| KEY NO. | TITLE | KEY NO. | TITLE |
|---|---|---|---|
| 1 | Assembly screws | 9-3 | Felt oiler |
| 2 | Nut (temporary) | 9-4 | Front bearing housing |
| 3 | Gear housing assy. | 10 | Armature assy. |
| 3-1 | Output pinion | 10-1 | Armature pinion |
| 3-2 | Gear housing | 10-2 | Thrust washer |
| 3-3 | Thrust washer | 10-3 | Felt washer |
| 3-4 | Shock absorber assy. | 10-4 | Plain washer |
| 3-5 | Spacer | 10-5 | Ball bearing |
| 3-6 | Rear brg. for output shaft | 10-6 | Armature |
| 3-7 | Mounting screws | 11 | Stator assy. |
| 3-8 | Lockwasher | 11-1 | Stator housing |
| 4 | Felt wick | 11-2 | Printed circuit board |
| 5 | Retainer plate | 12 | Insulator |
| 6 | Idler gear | 13 | Ball brg. pre-load spring |
| 7 | Intermediate gear | 14 | Plain washer |
| 8 | First drive gear | 15 | Rear housing |
| 9 | Front brg. housing assy. | 16 | Motor mounting screws |
| 9-1 | Retainer rivets | 17 | Lockwashers |
| 9-2 | Wick retainer | 18 | Assembly nuts |

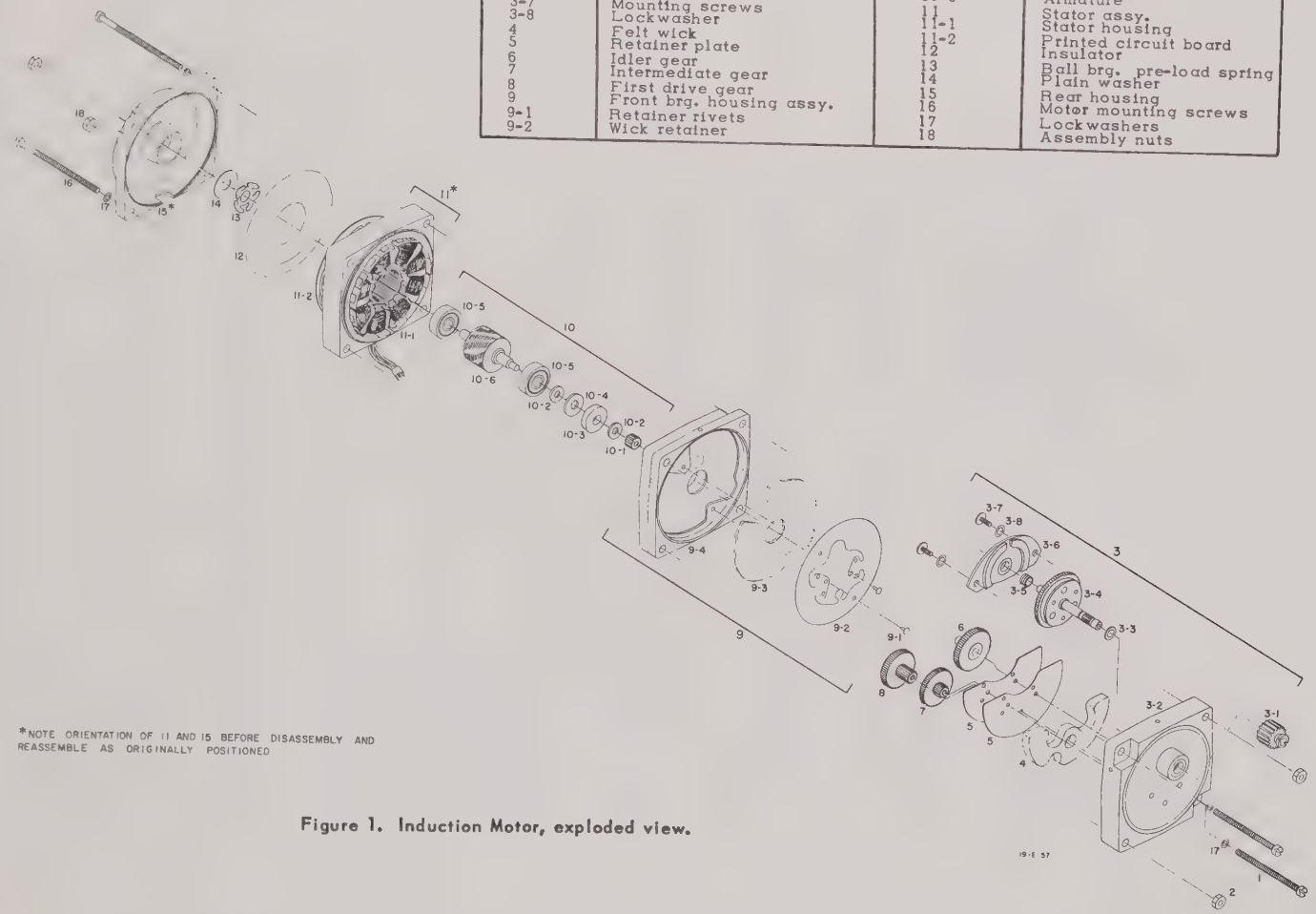


**Figure 1. Induction Motor, exploded view.**

## 1. CHECKS AND ADJUSTMENTS

### a. Chart Reroll Chain

(1) The chart reroll chain drives reroll spindle (fig. 1) and is factory adjusted initially. Check for proper adjustment as follows:

(a) Chart plate is held in place by spring clips at rear; to free chart plate, insert fingers behind upper corners and pull outward. Swing chart plate down.

(b) Feel chart reroll chain to be sure that tension is not great enough to bind but that there is no slack.

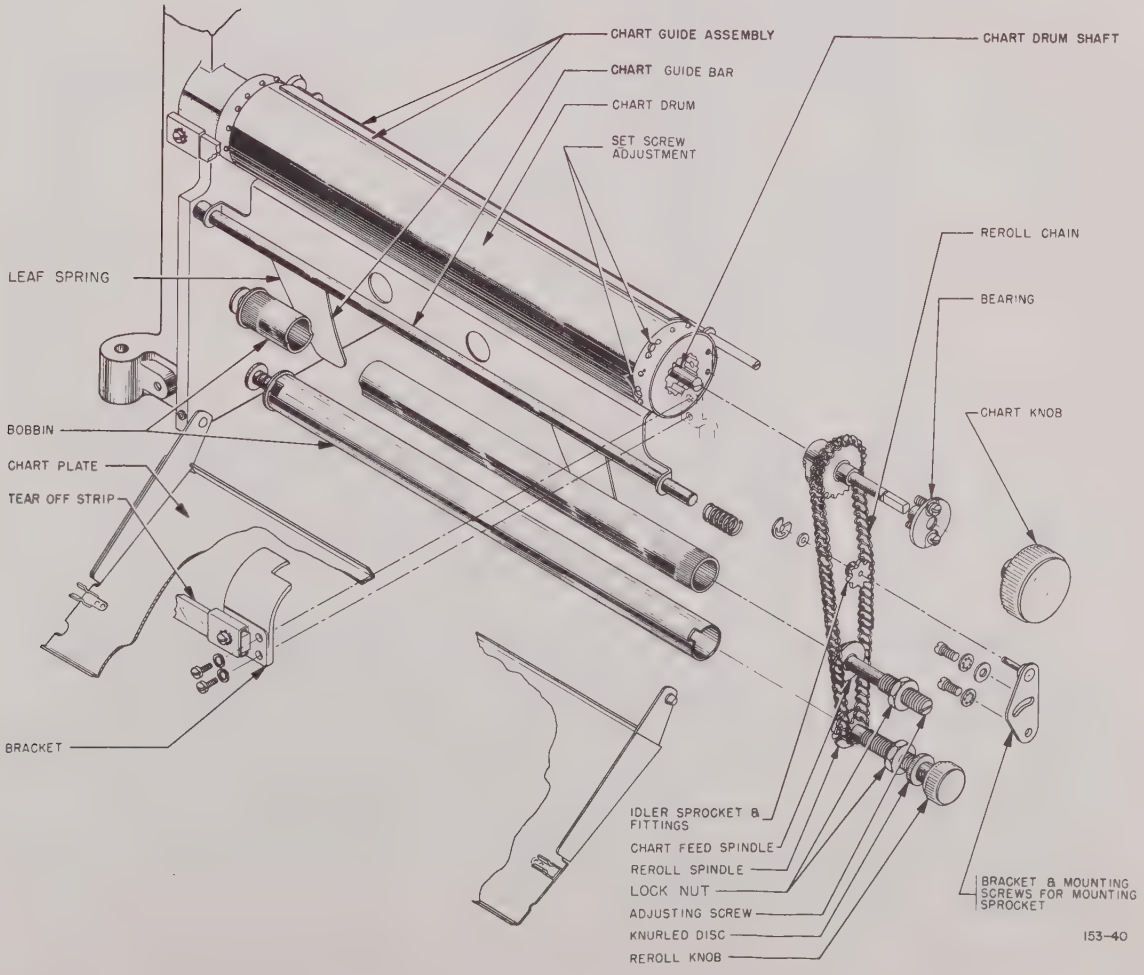


Figure 1. Strip Chart Drum Assembly with Ratchet Reroll

(2) If chart reroll chain is too tight or too slack, adjust as follows:

(a) Loosen mounting screws in idler sprocket bracket.
(b) Adjust idler sprocket to permit it to bear more or less tightly on chart reroll chain as required.
(c) Tighten screw to hold bracket in correct position.

**b. Chart Feed Spindle.** Refer to fig. 2. Clearance between flange of right-hand chart feed spindle and reroll chain should be 1/64-inch. If required, loosen locknut and turn adjusting screw until proper clearance is obtained.

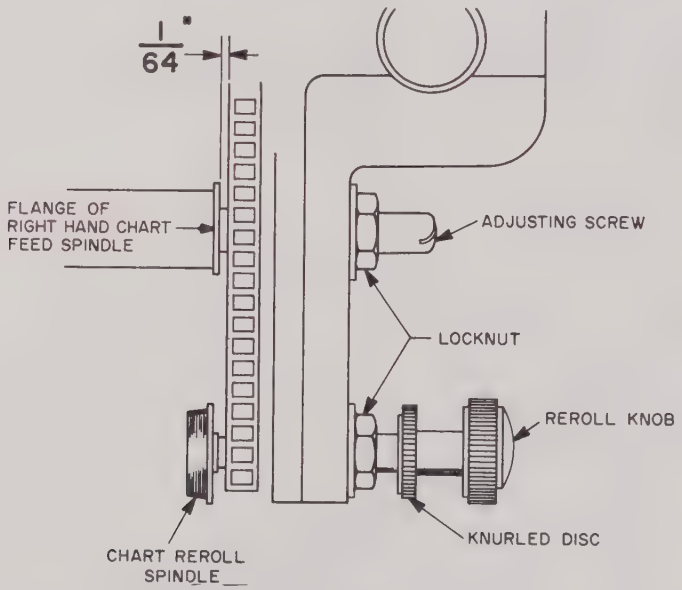

Figure 2. Lower Right-Hand Side of Chassis

**c. Chart Reroll Spindle.** If the chart reroll spindle is properly aligned and the chart is tracking properly on the drum, the right edge of the chart and the right end of the chart reroll tube will line up. If they do not line up, loosen the locknut and turn the knurled disc (fig. 2) as required to align right end of chart reroll tube with right edge of chart. Tighten locknut.

**d. Leaf Spring Tension.** The position of the two supply-side leaf springs is adjusted before shipment. If the springs become distorted, however, the following check and adjustment should be made to insure adequate supply-side tension during the entire unwinding of the supply roll. Place the knurled metal tube on the supply spindle. If the leaf springs are not in contact with tube, bend them forward, applying pressure at the upper portion of each spring. Both springs must contact the metal tube firmly and with approximately the same force.

**e. Paper Tension.** Paper tension developed by the reroll mechanism must average 14 ± 4 ozs. Check as follows:

(1) Place empty supply tube on reroll spindles and tape or tack an eight-inch length of string to center of tube so that string will wind on tube when chart drum is turned.

(2) Attach a spring scale (preferably with 32-oz. scale) to the free end of string.

(3) Hold scale stationary and turn chart drum manually while watching scale. Paper tension is delivered by mechanism each time the spring-loaded ball moves over one of the 18 flutes in the drum end; tension is observed as ounces of force on the spring scale. The average value of the scale readings must be 14 ± 4 ozs. If more than four of the 18 points are below 10 ozs., make sure reroll chain is not too tight on sprockets, par. 1, a,(2). If low readings are not due to tightness of chain or binding at spindles, or if one reading exceeds 24 ozs., refer to par. 2, remove drum, and install new sprocket and ratchet ball housing, spring and ball.

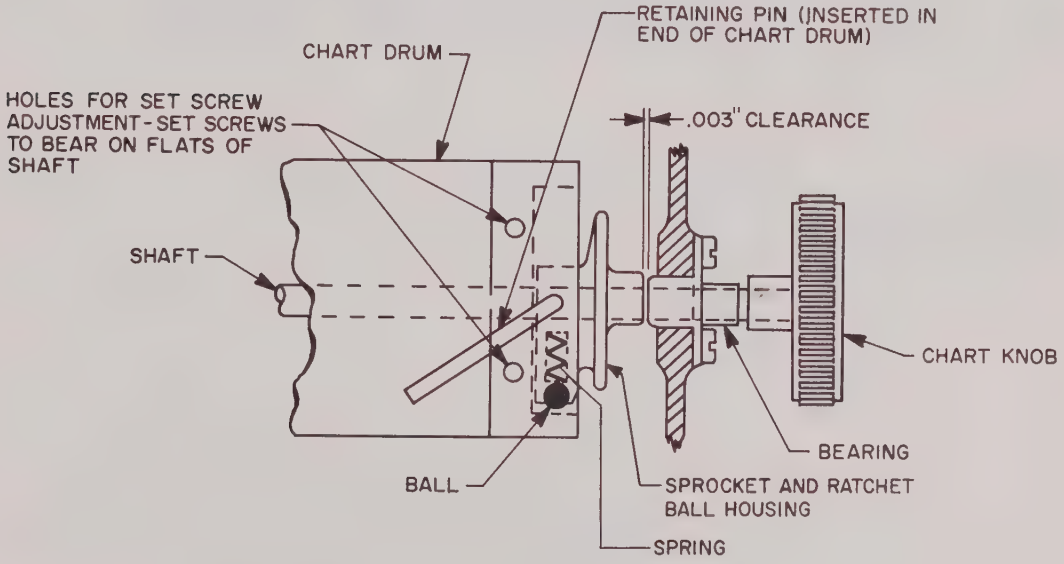


Figure 3. Ratchet Reroll Chart Drum Assembly

## 2. REPLACEMENT OF CHART DRUM ASSEMBLY

**a.** Remove tear-off strip and bracket (fig. 1).

**b.** Loosen two set screws in end of chart drum (see "set screw adjustment", fig. 1 and 3).

**c.** Withdraw shaft while holding hand cupped over end of drum containing sprocket and ratchet ball housing. When end of shaft is finally withdrawn from sprocket, the sprocket will move out of drum end under spring pressure and ball or both ball and spring will be ejected from sprocket; unless caught, these parts could become lost.

**d.** Disengage sprocket from reroll chain and remove chart drum from instrument.

**e.** Replacement drum assembly includes a sprocket and ratchet ball housing, held in position by a retaining pin (fig. 3). Engage sprocket in the reroll chain, hold the drum assembly in mounting position and start shaft through the bearing and the sprocket and ratchet ball housing. When shaft end reaches retaining pin, continue light inward pressure on shaft while withdrawing pin. Push shaft all the way through drum.

NOTE: Do not discard retaining pin. Reassemble sprocket, spring and ball of replaced chart drum and insert in drum end with hole in sprocket aligned with holes in drum end. Insert pin to hold assembly together and thus prevent loss of parts. Pin can also be used during removal of installed chart drum as follows: Insert pin and hold it pressed lightly against shaft while withdrawing shaft. When shaft end reaches pin, push pin all the way through drum before fully withdrawing shaft. Sprocket and ratchet ball housing is thus locked in chart drum until reinstallation according to par. e, above.

**f.** Set screws must bear on flats of shaft, therefore, turn knob, drum, or both until set screw holes in drum have same angular position as set screw holes in knob. Tighten set screws in drum, at same time establishing the .003-inch clearance shown in fig. 3.

# SERVICE



## 1. DRIVE CABLE

**a. Removal** (refer to fig. 1).

(1) Swing the chassis out of the case and remove the gear housing cover plate from the left-hand side casting.

(2) Turn the balancing motor pinion clockwise until the large drive gear hits the stop.

(3) Loosen, but do not remove, the cable clamp screws on the drive gear cable drum.

Note. If the instrument is supplied with auxiliary switches, loosen the knurled nut which clamps the actuating cam; turn the cam until one of the holes in the cam is in line with the screws in the drive cable clamp. The cable clamp can then be loosened without removing the cam.

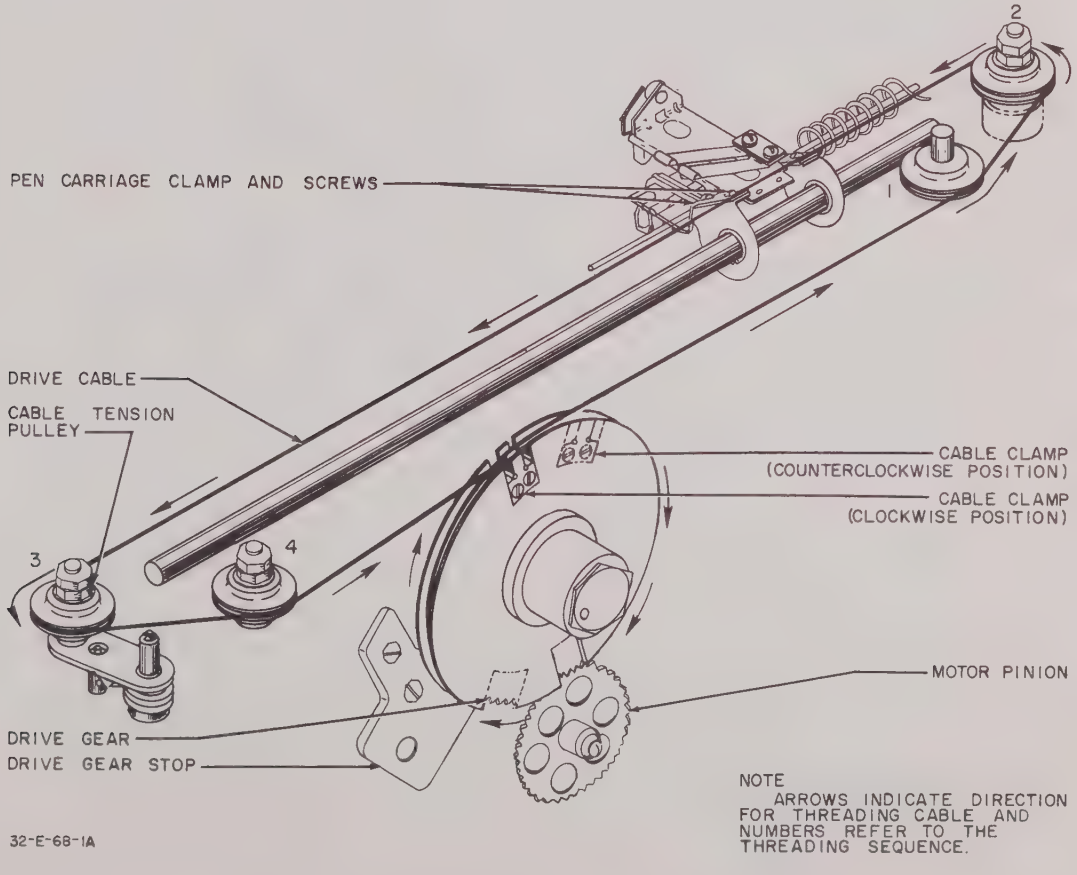


Figure 1. Straight slidewire drive cable, installation diagram.

(4) Loosen the screws in the pen carriage cable clamps and free the cable from these clamps.

(5) Press the cable tension pulley inward and lift the cable off both this pulley and the guide pulley adjacent to it.

(6) Remove the end of the drive cable from the outer slot in the cable clamp on the drive gear cable drum.

(7) Pass the cable around the pulleys on the left hand side casting; then remove the other end of the cable from the cable clamp on the drive gear cable drum.

(8) Remove the cable from the instrument taking care not to kink it.

**b. Installation**

(1) Turn the balancing motor pinion counterclockwise until the large drive gear is against the stop.

(2) Place one end of the drive cable in the inner slot of the cable clamp on the drive gear cable drum, so that the cable extends through the slot toward the left-hand side casting. Hold the cable taut and turn the drive gear counterclockwise to the limit of its travel.

(3) Pass the cable over the pulleys located near the left-hand side casting; then under the cable clamps on the pen carriage. Do not clamp the cable in place. Pass the cable over the guide pulley on the right-hand side casting, but not over the cable tension pulley.

(4) Insert the free end of the cable in the outer slot of the cable clamp on the drive gear cable drum.

(5) Press the cable tension pulley inward and slip the drive cable into position on the cable tension pulley.

(6) Tighten the screws on the cable clamp on the drive gear cable drum.

(7) Tighten the pen carriage cable clamp.

(8) Align the pen carriage (par. c. below).

(9) Check calibration.

**c. Alignment**

(1) Check alignment as follows:

(a) Install the chart per Section 3.

Note. Pen carriage alignment should be checked,and adjusted if necessary, at the side of the chart which has the round holes. In the following steps it is assumed that the round holes are on the right side of the chart and the elongated holes (humidity compensating holes) are on the left.

(b) Rotate the balancing motor pinion counterclockwise until the large drive gear is against the stop.

(c) If the pen record lines up with the extreme right graduation of the chart, the alignment is correct.

(d) With the pen carriage in the above position the indicating pointer on the carriage should line up with the extreme right graduation on the scale if the scale is correctly aligned.

(2) Correct for pen carriage misalignment as follows:

(a) Loosen the knurled nut on the right side of the slidewire housing and swing up the slidewire housing.

(b) Loosen the pen carriage cable clamps.

(c) Position the pen carriage so the pen record lines up with the extreme right chart graduation.

(d) Make sure the cable is in the slot of the cable clamp; tighten the clamp.

(e) Close slidewire housing.

(3) Correct for scale misalignment as follows:

(a) Loosen the knurled nut on the right side of the slidewire housing and swing up the slidewire housing.

(b) Line up the pen record with the extreme right graduation on the chart.

(c) Loosen the two screws which hold the scale in place.

(d) Line up the extreme right graduation on the scale with the indicating pointer on the pen carriage.

(e) Tighten the two screws and check the pointer travel by turning the motor pinion clockwise until the drive gear hits the stop.

(f) The extreme left graduation on the scale should line up with the pointer within 0.01 inch.

(g) Recheck calibration.

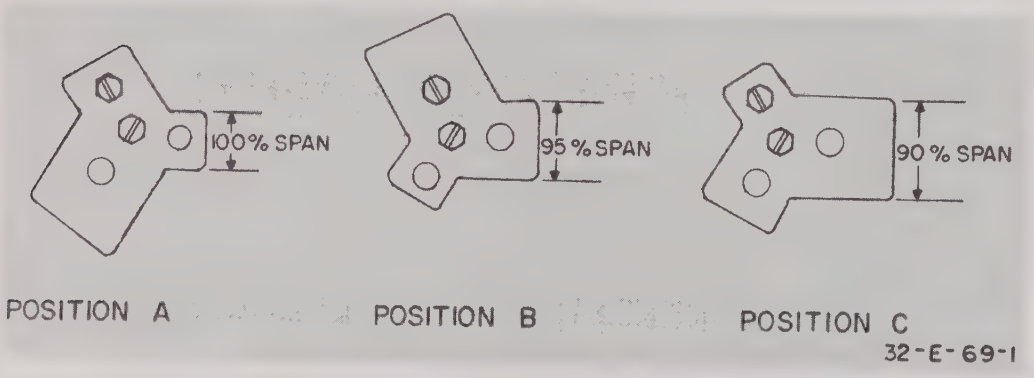


Figure 2. Three positions of drive gear stop.

## 2. DRIVE GEAR STOP ADJUSTMENT

Three calibration spans are available, depending on the position of the drive gear stop (see fig. 2). In position A, the nominal 0 to 100 per cent span is used. Positions B and C provide spans of 95 and 90 per cent respectively and can be adjusted within the following limits by aligning the pen carriage as described in paragraph 1.c. above.

**a. Position B.** Adjustable to any 95 per cent span, such as 2.5 to 97.5, 0 to 95, or 5 to 100 per cent.

**b. Position C.** Adjustable to any 90 per cent span, such as 5 to 95, 0 to 90, or 10 to 100 per cent.

Note. If the position of the drive gear stop is changed, recalibrate the instrument before placing the unit back into service.

## DRIVE CABLE — SERVICE

### 1. REMOVAL

**a.** Switch instrument power off.

**b.** Swing the chassis out of the case and remove the cover plate from the left-hand side casting.

**c.** Turn the balancing motor pinion clockwise until the large drive gear hits the stop.

**d.** Loosen, but do not remove, the cable clamp screws on the drive gear cable drum.

**e.** Free the cable by loosening the screws in the pen carriage cable clamps.

**f.** Press the cable tension pulley inward and lift the cable off both this pulley and the adjacent guide pulley.

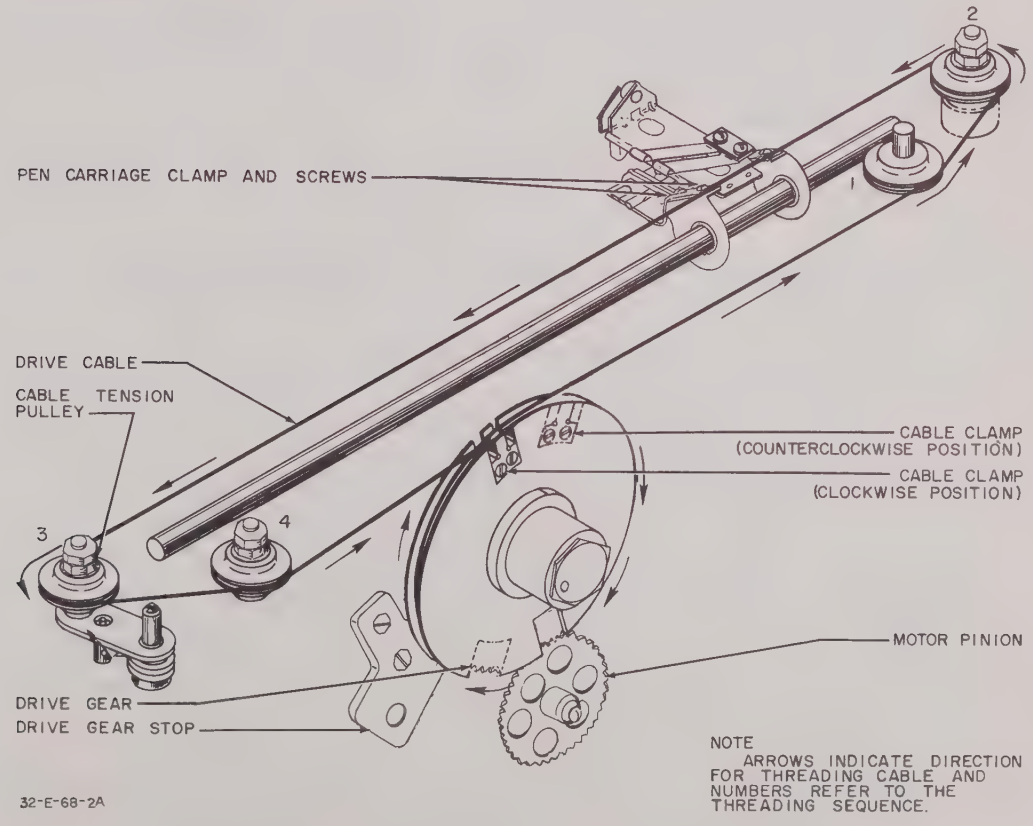


Figure 1. Straight slidewire drive cable, installation diagram.

652-0005-153

g. Remove the end of the drive cable from the outer slot in the cable clamp on the drive gear cable drum.

h. Pass the cable around the pulleys on the left hand side casting; then remove the other end of the cable from the cable clamp on the drive gear cable drum.

i. Remove the cable carefully, do not kink it.

## 2. INSTALLATION

a. Turn the balancing motor pinion counterclockwise until the large drive gear is against the stop.

b. Place one end of the drive cable in the inner slot of the cable clamp on the drive gear cable drum, so that the cable extends through the slot toward the left-hand side casting. Hold the cable taut and turn the drive gear counterclockwise to the limit of its travel.

c. Pass the cable over the pulleys located near the left-hand side casting; then under the cable clamps on the pen carriage. Do not clamp the cable in place. Pass the cable over the guide pulley on the right-hand side casting, but not over the cable tension pulley.

d. Insert the free end of the cable in the outer slot of the cable clamp on the drive gear cable drum.

e. Press the cable tension pulley inward and slip the drive cable into position on the cable tension pulley.

f. Tighten the screws on the cable clamp on the drive gear cable drum.

g. Tighten the pen carriage cable clamp.

h. Align the pen carriage (par. 3b)

i. Check calibration.

## 3. ALIGNMENT

a. Check alignment as follows:

(1) Install the chart per Section 3.

NOTE: Pen carriage alignment should be checked, and adjusted if necessary, at the side of the chart which has the round holes. In the following steps it is assumed that the round holes are on the right side of the chart and the elongated holes (humidity compensation) are on the left.

(2) Rotate the balancing motor pinion counterclockwise until the large drive gear is against the stop.

(3) If the pen record lines up with the extreme right graduation of the chart, the alignment is correct.

(4) With the pen carriage in the above position the indicating pointer on the carriage should line up with the extreme right graduation on the scale if the scale is correctly aligned.

b. Correct for pen carriage misalignment as follows:

(1) Loosen the knurled nut on the right side of the slidewire housing and swing up the slidewire housing.

(2) Loosen the pen carriage cable clamps.

(3) Position the pen carriage so the pen record lines up with the extreme right chart graduation.

(4) Make sure the cable is in the slot of the cable clamp; tighten the clamp.

(5) Close slidewire housing.

c. Correct for scale misalignment as follows:

(1) Loosen the knurled nut on the right side of the slidewire housing and swing up the slidewire housing.

(2) Line up the pen record with the extreme right graduation on the chart.

(3) Loosen the two screws which hold the scale in place.

(4) Line up the extreme right graduation on the scale with the indicating pointer on the pen carriage.

(5) Tighten the two screws and check the pointer travel by turning the motor pinion clockwise until the drive gear hits the stop.

(6) The extreme left graduation on the scale should line up with the pointer within 0.01 inch.

(7) Recheck calibration.

## CYCLIC PRINTING MECHANISM — SERVICE

### 1. RETARD CAM

**a.** Follower arm spring tension is adjustable to permit operation of instrument in non-vertical positions. This spring, however, is factory set for operation in the vertical plane.

**b.** To operate a non-control instrument in any position between the vertical and horizontal planes, proceed as follows:

(1) Increase spring tension by moving spring arm (Fig. 3) to one of the other spring holes or, if necessary, to outer edge of follower arm.

(2) Correct tension will bring retard cam to rest (after printing) with follower arm roller in bottom of retard cam depression.

### 2. PRINT MECHANISM

**a.** Check adjustment of printing mechanism (fig. 1) as follows:

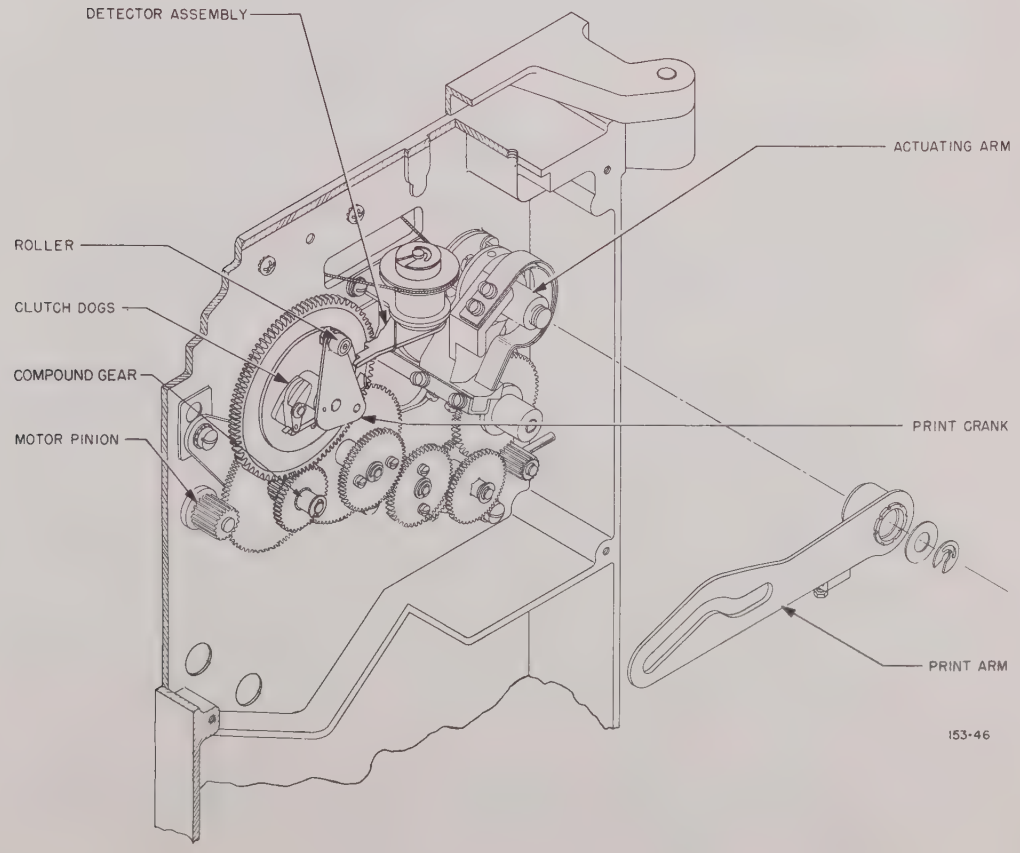


Figure 1. Cyclic printing mechanism

(1) Set print crank in rest position (fig. 2).

(2) Roller on follower arm should be in bottom of retard cam depression.

(3) Clearance between print wheel and chart should be approximately 1/16 inch.

(4) Pressure on printing mechanism is correctly adjusted when record is printed distinctly and type is not forced into paper. Maximum permissible separation at "B" is 1/64 inch during printing (fig. 2).

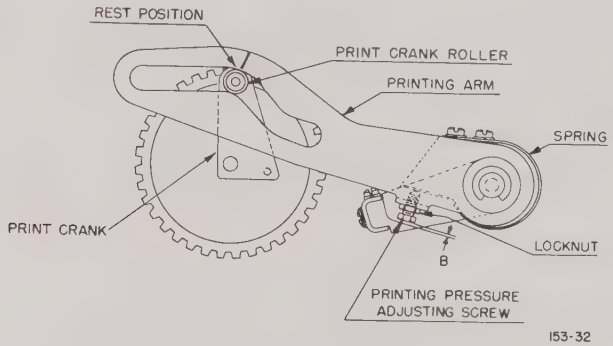


Figure 2. Print mechanism, rest position

**b.** Make adjustments to printing mechanism in following sequence:

(1) Loosen the retard cam adjusting screws and set print cam and gear assembly so that high point on cam is opposite detector finger.

(2) Remove cotter which holds first compound gear on gear train, then disengage gears. Hold cam and gear assembly stationary and rotate operating disc assembly until dog on operating disc assembly is just operated by detector finger.

(3) Re-engage gears in gear train and replace cotter. With dog on operating disc assembly engaging print crank, operate printing mechanism through its cycle.

(4) After dog has been disengaged from print crank, set retard cam follower on low part of retard cam and tighten adjusting screws on cam.

(5) If pressure on printing mechanism is incorrect, loosen locknut on printing pressure adjusting screw (fig. 2) and adjust printing pressure to minimum consistent with a clear record at center and at both ends of chart.

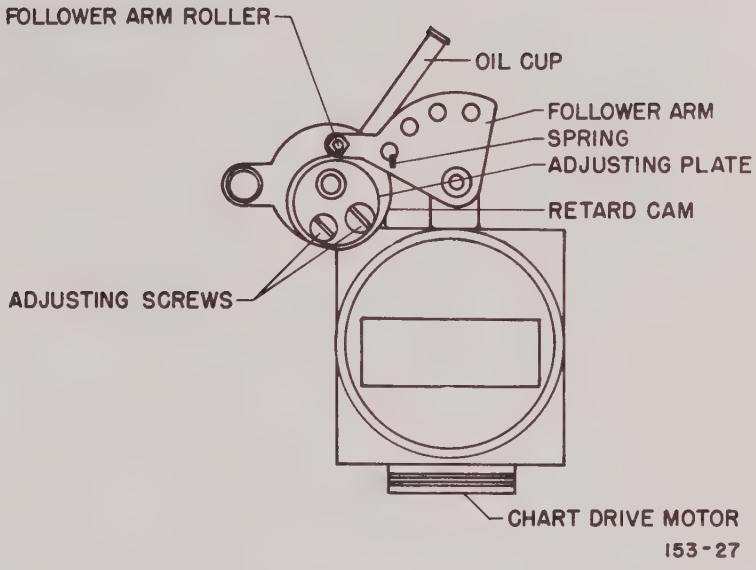


Figure 3. Retard cam and follower arm

(6) Be certain the maximum separation at "B" does not exceed 1/64 inch during printing.

(7) Tighten locknut to secure printing pressure adjustment screw in correct position.

# SYNCHRO-BALANCE PRINT MECHANISM

SERVICE

## 1. ADJUSTMENT

a. Check adjustment of printing mechanism (Fig. 1) as follows:

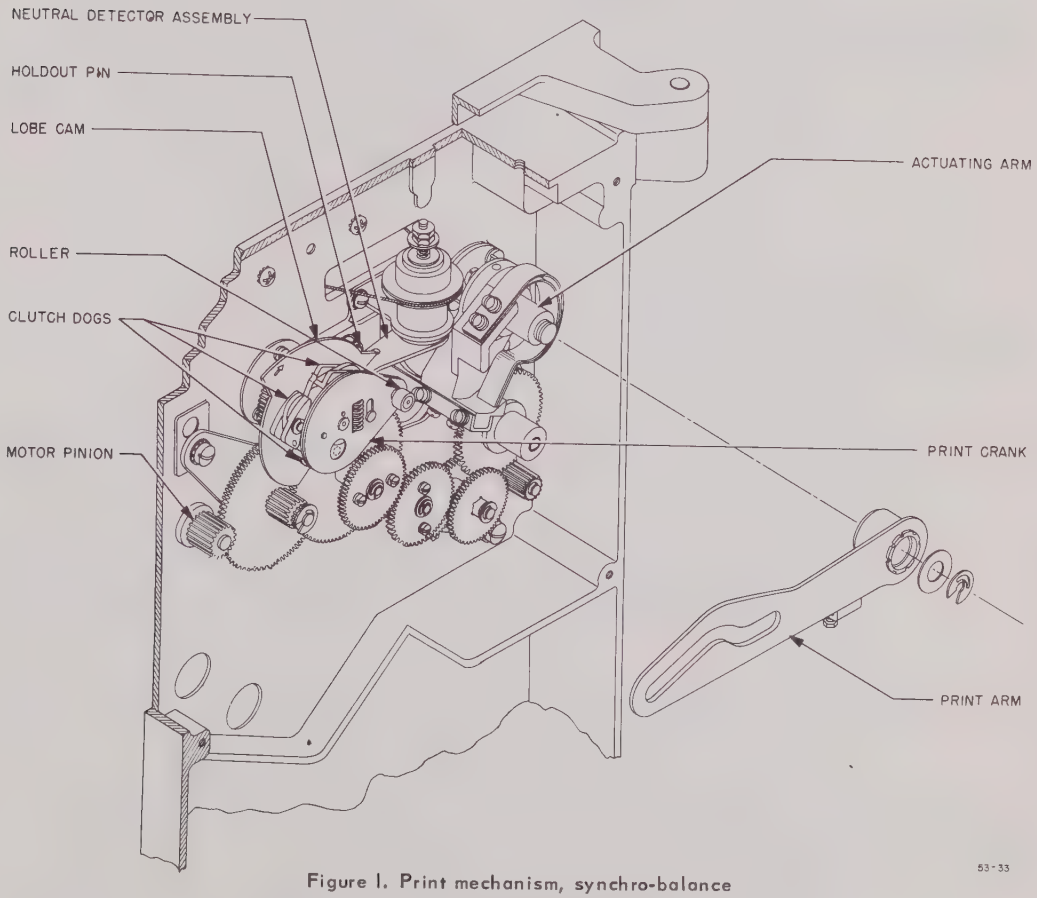


Figure 1. Print mechanism, synchro-balance

(1) Set print crank in rest position (with the print crank roller opposite index line on printing arm). See figure 2.

(2) With print crank in rest position, roller on follower arm should be in bottom of depression on retard cam.

(3) Clearance between print wheel and chart should be approximately 1/16 inch.

(4) Pressure on printing mechanism is correctly adjusted when record is printed distinctly and type is not forced into chart paper.

(5) Maximum permissible separation at B (figure 2) is 1/64 inch during printing.

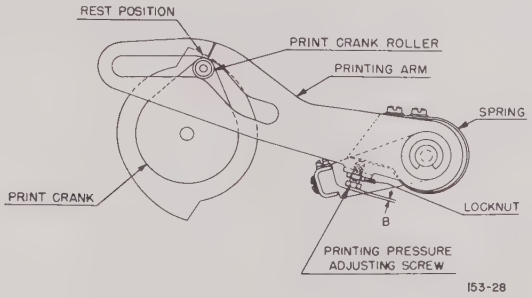


Figure 2. Print mechanism, rest position

b. When necessary, adjust the printing mechanism as follows:

(1) Set print crank in rest position.

(2) If roller on follower arm is incorrectly positioned, loosen two adjusting screws on retard cam until follower arm roller rests in bottom of depression on retard cam.

(3) If pressure on printing mechanism is incorrect, loosen locknut on printing pressure adjusting screw and adjust printing pressure to minimum consistent with a clear record at center and at both ends of chart.

(4) Be certain maximum separation at B (figure 2) does not exceed 1/64 inch during printing.

(5) Tighten locknut to secure printing pressure adjustment screw.

## 2. FOLLOWER ARM TENSION

a. Follower arm spring tension is adjustable to permit operation of instrument in non-vertical positions. This spring, however, is factory set for operation in the vertical plane.

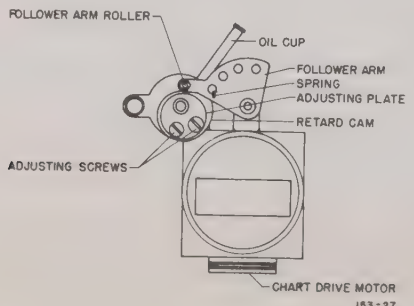


Figure 3. Retard cam and follower arm

b. To operate a non-control instrument in any position between the vertical and horizontal planes, proceed as follows:

(1) Increase spring tension by moving spring arm (Fig. 3) to one of the other spring holes or, if necessary, to outer edge of follower arm.

(2) Correct tension will bring retard cam to rest (after printing) with follower arm roller in bottom of retard cam depression.

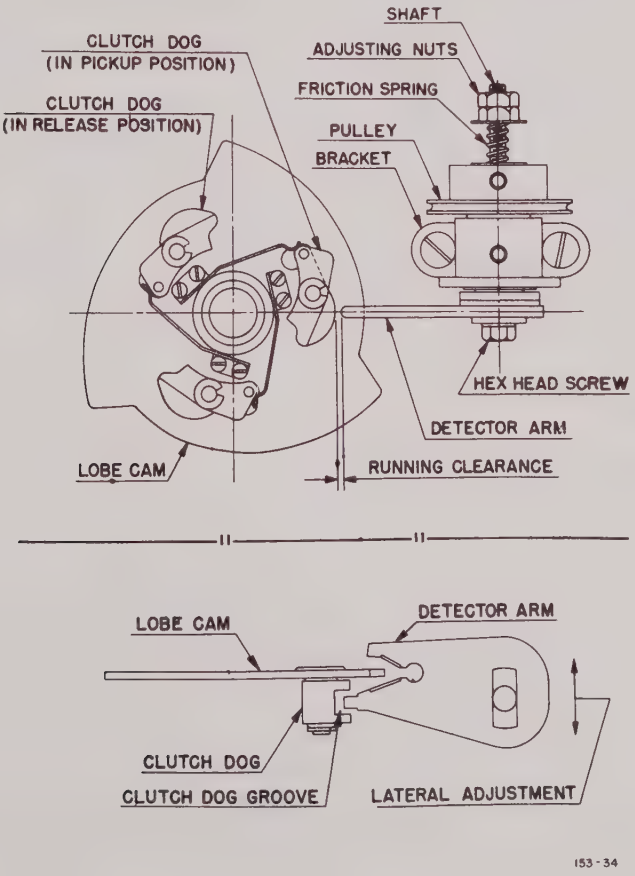


Figure 4. Neutral detector mechanism

## 3. DETECTOR

a. Check position of detector arm with respect to pulley bracket (fig. 4).

(1) Switch off instrument power.

(2) Manually rotate chart drive motor pinion (clockwise) until a cam lobe passes through the detector arm slot and sets detector arm in its trip position.

(3) Without disturbing detector arm, manually trip a clutch dog (on lobe cam) to its pick-up position.

(4) Turn motor pinion (clockwise) until hump on clutch dog passes tip of detector arm and tip of detector arm is in clutch dog groove.

(5) Equal clearances will exist between tip of detector arm and sides of clutch dog groove when detector arm is positioned correctly.

(6) Check clearances with each clutch dog successively.

b. When necessary, adjust detector arm as follows:

(1) Loosen hex-head screw which secures detector arm to pulley bracket (figure 4).

(2) Make lateral adjustment as required to provide equal clearances between detector arm and clutch dog groove.

(3) Tighten hex-head screw to secure detector arm.

## 4. PULLEY BRACKET

a. Check pulley bracket as follows:

(1) Switch off instrument power. Check position of detector arm and adjust if necessary as described above.

(2) Manually rotate chart motor pinion (clockwise) until a cam lobe passes through slot in detector arm and sets arm in its trip position (figure 4).

(3) Without disturbing detector arm, continue to turn motor pinion. Tip of detector arm should trip clutch dog to its pick-up position.

(4) Manually move detector arm toward chassis and turn motor pinion clockwise. Detector arm should trip clutch dog to its release position.

(5) Check action of detector arm with each clutch dog.

b. When necessary, adjust pulley bracket as follows:

(1) Manually rotate chart motor pinion (clockwise) until a cam lobe passes through slot in detector arm and sets detector arm to its trip position.

(2) Without disturbing detector arm, manually trip a clutch dog to its pick-up position.

(3) Turn motor pinion until hump on clutch dog is in line with tip of detector arm.

(4) Loosen two screws which hold pulley bracket to chassis. Position bracket for a minimum running clearance between detector arm and dog (not less than .002 inch nor more than .010 inch).

(5) Tighten screws to fix pulley bracket in correct position and check action of detector arm with each dog.

## 5. FRICTION SPRING

a. When friction spring pressure is correct, motion of indicating pointer in either direction on scale prevents instrument from printing.

b. Adjusting nuts are provided on pulley shaft. Tighten nuts to increase friction; loosen them to reduce friction.

c. Lock adjusting nuts in correct position and check operation; readjust if necessary.

## 1. GENERAL

a. Before attempting to troubleshoot the controller, it will be necessary to fully understand the operation of the unit. This information is available in sections 1, 3, and 5 of this publication.

b. This section provides checkout and troubleshooting data for the automatic and manual chassis of the controller and provides wiring data for the entire unit. The test setups required for checkout procedures are shown in figures 1 and 2; a Schematic Wiring Diagram (showing the complete wiring of the case, the manual chassis, and the automatic chassis), Component Layout Diagrams (showing the physical locations of components), and Printed Circuit Diagrams (showing voltage check points and voltage data) are included at the end of this section.

## 2. TEST EQUIPMENT REQUIRED

The following items, not supplied with the controller, are required to check out and to troubleshoot the controller.

| Item | Used to |
|---|---|
| 120 volt ac, 60 cycle line | Supply power |
| 32-terminal male connector (Amphenol 26–4100–32P) | Supply power to automatic chassis |
| 32-terminal male connector (Amphenol 26–4100–32P) | Supply power to manual chassis |
| 0–24 volt dc source | Simulate an input signal to the control circuit |
| 0–100 mv (dc) calibrated voltage source | Simulate an error signal to relay control amplifier |
| Oscilloscope | Trace carrier signal in oscillator-amplifier |
| Multimeter, 20,000 ohms per volt | Check voltage and resistance |
| Resistor, 2000 ohms, 1W | Simulate load for slidewire bridge supply |
| Resistor, 1000 ohms | Provide series resistance for 24-vdc source |
| Resistors, 2, 68 ohms, 1 watt | Simulate load for manual supply |
| Jumper | Tie junction of manual supply load resistors to % POSITION meter |
| Switches, 2 (DPTT) | Apply error signal voltages to oscillator-amplifier and relay control amplifier |
| Switches, 2 (SPST) | Short oscillator-amplifier input, to energize control transfer relay, and to apply a manual tracking signal |
| Switch, 1 (SPDT) | Transfer control from automatic to manual (or reverse) |

## 3. CHECKOUT PROCEDURES

**a. Automatic Chassis.** Loosen the two captive screws in the automatic chassis panel and remove the automatic chassis from the controller case. Procure a 32-terminal male connector that matches the female connector at the rear of the automatic chassis; wire the male connector as shown in figure 1, a, and plug it into the female connector. With a-c power off, all SPST test switches open, with switch S4 open, and with switch S-1 at the No. 2 position, perform the following checks:

(1) Manual tracking circuit.

(a) Energize the controller.

(b) Adjust the output voltage of the voltage source to 9.0 vdc.

(c) Close switch S-2: the voltmeter should immediately indicate 9.0 vdc.

(d) Range the output voltage of the adjustable voltage source from 3 to 15 vdc; the voltmeter reading should track the manually adjusted input signal in a one-to-one correspondence.

(2) Proportional band network

(a) With all SPST switches (figure 1, a) open and with switch S-1 at the No. 2 position, make the following initial settings:

Range Change Tab in.....0.5 to 50% PB, 0 to 10 repeats/min. position (x1 on summing junction capacitors)

P.B. % ..... 50%

Reset-R/Min ..... 0

Rate-Min ..... 0

(b) Adjust the output voltage of the voltage source to 9.0 vdc, and close switch S-2; the voltmeter should indicate 9.0 vdc.

(c) Close switch S-3 (to short the amplifier input); the voltmeter reading should remain at 9±5 vdc for one minute. If the required voltage reading is not obtained, adjust the contact position of potentiometer R-22 on the turret board (see Component Layout Diagram) to obtain the correct reading.

(d) Open switch S-3.

(e) Close switch S-4 (to de-energize the control transfer relay, K-3); the voltmeter reading should remain at 9.0 vdc.

(f) Open switch S-2.

(g) Adjust the output voltage of the voltage source to 3.0 vdc, and move switch S-1 on the test setup to position No. 1; the output voltage should immediately decrease to 6.0 ± 0.9 vdc.

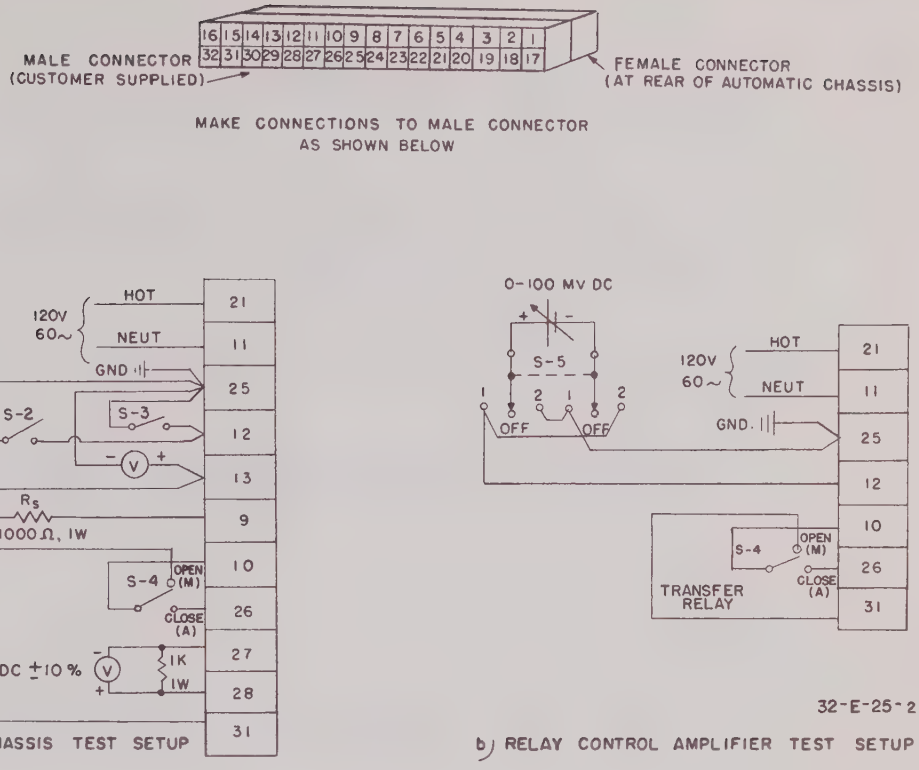


Figure 1. ELECTR-O-LINE Controller, Automatic Chassis Test Setup

(h) Open switch S-4.

(i) Close switch S-2.

(j) Move switch S-1 on the test setup to position No. 2, and adjust the output voltage of the voltage source to 9.0 vdc; the output voltmeter should indicate a value of 9.0 vdc.

(k) Close switch S-4.

(l) Open switch S-2.

(m) Adjust the output voltage of the voltage source to 3.0 vdc, and move switch S-1 to position No. 3; the output voltage should immediately increase to 12.0 ± 0.9 vdc.

(3) Reset rate

(a) Maintain the initial settings listed in paragraph 3. a., (2), with all SPST test switches (figure 1, a) open and with switch S-1 at the No. 2 position.

(b) Close switch S-2, and adjust the output voltage of the voltage source to 9.0 vdc; the output voltmeter should indicate a value of 9.0 vdc.

(c) Set the RESET-R/MIN adjustment to position 1.

(d) Close switch S-4.

(e) Open switch S-2.

(f) Adjust the output voltage of the voltage source to 3.0 vdc, and move switch S-1 to the No. 1 position; within one minute, the output voltage should decrease to 3.0 ± 1.8 vdc.

(g) Open switch S-4.

(h) Close switch S-2.

(i) Move switch S-1 to the No. 2 position, and adjust the output voltage source to 9.0 vdc; the output voltmeter should indicate a value of 9.0 vdc.

(j) Close switch S-4.

(k) Open switch S-2.

(l) Adjust the output voltage of the voltage source to 3.0 vdc, and move switch S-1 to the No. 3 position; within one minute, the output voltage should increase to 15.0 ± 1.8 vdc.

(4) Range change test

(a) With all SPST test switches (figure 1, a) open and with switch S-1 at the No. 2 position, place the range change tab in the 5 to 500% P.B., 0 to 100 repeats per minute position (x10 on summing junction capacitors).

(b) Adjust the proportional band setting to 500%.

(c) Set the RESET-R/MIN adjustment to zero.

(d) Close switch S-2.

(e) Adjust the output voltage of the voltage source to 9.0 vdc; the output voltmeter should indicate a value of 9.0 vdc.

(f) Close switch S-4; the controller output voltage should remain at 9.0 vdc.

(g) Open switch S-2.

(h) Adjust the output voltage of the voltage source to 15.0 vdc.

(i) Move switch S-1 on the test setup to the No. 1 position; the output voltage should immediately decrease to 7.5 ± 0.45 vdc.

(j) Move switch S-1 to the No. 2 position and open switch S-4.

(k) Close switch S-2.

(l) Adjust the output voltage of the voltage source to 9.0 vdc; the output voltmeter should indicate a value of 9.0 vdc.

(m) Close switch S-4.

(n) Open switch S-2.

(o) Adjust the output voltage of the voltage source to 15.0 vdc.

(p) Move switch S-1 on the test setup to the No. 3 position; the output voltage should immediately increase to 10.5 ± 0.45 vdc.

(q) Open switch S-4.

(r) Set the RESET-R/MIN adjustment to position 1.

(s) Close switch S-2.

(t) Move switch S-1 to the No. 2 position, and adjust the output voltage of the voltage source to 9.0 vdc; the output voltmeter should indicate a value of 9.0 vdc.

(u) Close switch S-4.

(v) Open switch S-2.

(w) Adjust the output voltage of the voltage source to 15.0 vdc, and move switch S-1 to the No. 1 position; within one minute, the output voltage should decrease to 6.0 ± 0.9 vdc.

(5) Rate time

(a) With all SPST test switches (figure 1, a) open and with switch S-1 at the No. 2 position, place the range change tab in the 0.5 to 50% P.B., 0 to 10 repeats per minute position (x1 on summing junction capacitors).

(b) Adjust the proportional band setting to 20%.

(c) Set the RESET-R/MIN adjustment to zero.

(d) Set the RATE-MIN adjustment to position 10.

(e) Close switch S-2; adjust the output voltage of the voltage source to 3.0 vdc; the output voltmeter should indicate a value of 3.0 vdc.

(f) Close switch S-4.

(g) Open switch S-2.

(h) Adjust the variable voltage source to an indicated output voltage of 0.48 volts.

(i) Move switch S-1 to the No. 3 position to apply the 0.48-volt (2.0% step change) input signal; the output voltage reading should immediately increase to 12.5 vdc; within 60 ± 18 seconds, the output voltage reading should decrease to 7.9 vdc (41% of 12 vdc output span plus 3.0 vdc).

(6) Relay control amplifier

(a) Make the test setup shown in figure 1, b.

(b) Close switch S-4.

(c) Connect the leads of an a-c voltmeter between pins 11 (-) and 19 (+) of the male connector, or connect the leads of an ohmmeter between pins 2 and 17 of the male connector.

(d) Move switch S-5 to the No. 1 position.

(e) Adjust the output voltage of the voltage source to 30 mv; relay K-1 should energize at 30 mv, as indicated by a reading of 120 vac on the a-c voltmeter or by ohmmeter needle defection from INF to zero; if relay K-1 energizes before the output voltage of the voltage source is set to 30 mv, or if relay K-1 fails to energize when a 30-mv signal is applied, adjust the amplifier balance potentiometer, R-41, until relay K-1 energizes at 30 mv.

(f) Connect the leads of an a-c voltmeter between pins 11 (-) and 6 (+) of the male connector, or connect the leads of an ohmmeter between pins 2 and 4.

(g) With the output voltage of the adjustable voltage source at 30 mv, move switch S-5 to the No. 2 position; relay K-2 should energize at (-) 30 mv as indicated by a voltmeter reading of 120 vac or ohmmeter needle deflection from INF to zero; if relay K-2 does not energize at (-) 30 mv, adjust the gain potentiometer, R-27, until relay K-2 energizes at (-) 30 mv. If the gain setting must be adjusted to energize relay K-2 at (-) 30 mv, repeat steps (c) through (g) until relay K-1 energizes at +30 mv and relay K-2 energizes at -30 mv.

NOTE: With an initial range of insensitivity from +30 mv to -30 mv, the initial 60 mv span can be increased or decreased by changing the SENSITIVITY adjustment at the installation (to prevent overshoot of the valve motor used with the controller).

**b. Manual Chassis.**

(1) Remove the door of the controller case; if the automatic chassis is installed, loosen the two knurled captive screws on the front panel of the automatic chassis and remove the automatic chassis.

(2) Remove the four screws which secure the front panel of the manual chassis to the front frame of the controller; place both hands on the underside of the manual chassis (via the automatic chassis cutout) and pull forward to remove the manual chassis.

(3) Procure a 32-terminal male connector which matches the female connector at the rear of the manual chassis.

(4) Wire the male connector as shown in figure 2 and plug it into the female connector.

(5) Supply a-c power to the test setup; the pilot lamp should energize; the voltmeter reading should be 12 ± 1.2 vdc; the % POSITION *meter should indicate 50%. If required, adjust the contact position of the meter span potentiometer until the meter needle indicates 50%.

NOTE: The meter span potentiometer should be adjusted at the installation to calibrate the meter range to the valve slidewire used with the controller. During manual control, access to the meter span potentiometer is gained by removing the automatic panel from the controller case; the span potentiometer can then be adjusted by inserting a screwdriver tip through the cutout in the bottom of the manual chassis.

(6) Move the MANUAL control switch to the D position; the VALVE CLOSE lamp should be energized.

(7) Move the MANUAL control switch to the U position; the VALVE OPEN lamp should be energized.

(8) Disconnect the a-c supply and, if required, check the continuity of all leads to the motor control circuit and to the control transfer relay circuit by manipulating the AUTO-MAN switch and the MANUAL control switch.

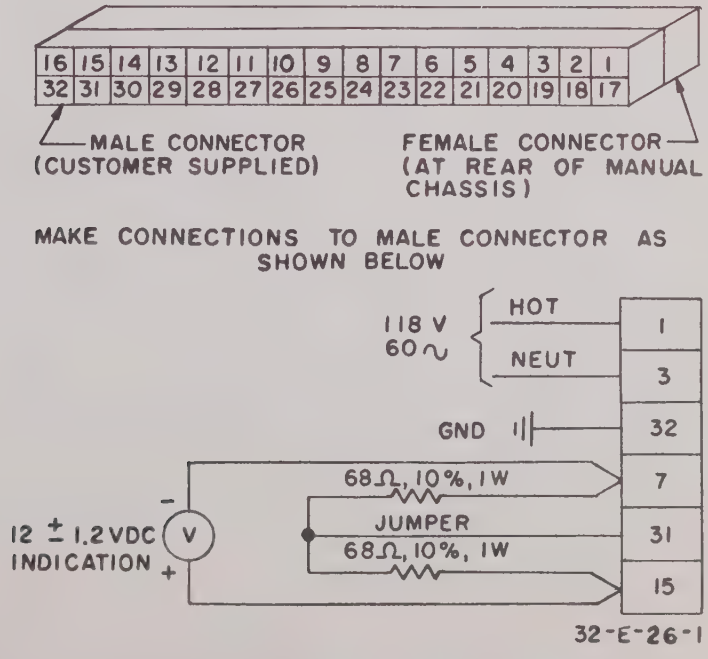


Figure 2. ELECTR-O-LINE Controller, Manual Chassis Test Setup

* If a static charge (developed by contact) on the face of the % POSITION meter causes deflection of meter needle, apply suitable anti-static lubricant to the

## 4. TROUBLESHOOTING, AUTOMATIC CONTROL CIRCUIT, PRELIMINARY PROCEDURES.

If the source of a system failure has been isolated to the controller proceed as follows:

NOTE: The following procedures are for a system failure which occurs during automatic control only; if a failure occurs during manual control, the fault must lie with the instrument a-c supply, the valve motor supply, line fuses, wiring continuity, or with the continuity of the control switches.

**a.** If the pilot lamp on the manual panel is de-energized, remove the automatic chassis from the controller case and check the instrument line fuse at the right side of the center frame inside the controller case.

(1) Replace the instrument line fuse, if required.

(2) If the fuse is satisfactory, remove the manual panel and use a multimeter to check for instrument a-c power at pins 1 (hot) and 3 (neutral) of the manual chassis mating connector.

(a) If no a-c power is indicated at pins 1 and 3, remove the barrier plate at the rear of the controller case and check for a-c power at the terminals marked HOT and NEUT (neutral).

1. If no a-c power is indicated, restore a-c power.

2. If a-c power is indicated, continuity of the POWER-ON-OFF switch (if supplied), case wiring, or the manual chassis mating connector is at fault; replace defective switch or connector, or restore case wiring continuity.

(b) If a-c power is indicated at pins 1 and 3 of the manual chassis mating connector, continuity of the manual chassis wiring, the manual chassis plug, or the pilot lamp is at fault; replace the plug or the lamp, or restore the continuity of case wiring.

**b.** If the pilot lamp on the manual panel is energized, remove the barrier plate at the rear of the controller case and measure the d-c voltage between terminals 11 (+) and 12 (-); the voltage should be 24 vdc ± 10%.

(1) If no voltage is indicated, remove the automatic chassis from the controller case and check for a-c power at pins 21 (hot) and 11 (neutral) of the automatic chassis mating connector.

(a) If no a-c power is indicated at pins 11 and 21, continuity of case wiring or continuity of the automatic chassis mating connector is at fault; restore continuity.

(b) If a-c power is indicated, check the continuity of the primary winding of transformer T-2 (make ohmmeter connections between pins 11 and 21 of the automatic chassis plug).

1. If no continuity is indicated, replace transformer T-2.

2. If continuity is indicated, check out all components of the slidewire bridge supply to isolate the fault (connect 1000 ohm, 1 watt load resistor across terminals 27 and 28 of automatic chassis plug (figure 1, a) to obtain proper check voltage readings); replace any defective component.

(2) If the proper d-c voltage is indicated at terminals 11 and 12, measure the d-c voltage at terminals 1 (-) and 2 (+); the voltage should be 12 vdc.

(a) If no voltage is indicated, remove the manual chassis from the controller case and measure the resistance between pins 7 and 15 of the manual chassis mating connector.

1. If the ohmmeter needle indicates INF, continuity of case wiring or continuity of manual panel mating connector is at fault; restore continuity.

2. If the ohmmeter needle indicates 135 ohms, check out the valve slidewire power supply components in the manual panel.

(b) If the correct voltage is obtained at terminals 1 and 2, check for valve motor a-c power between terminals 7 (HOT) and 10 (COMMON), between terminals 8 (VALVE OPEN POWER) and 10, and between terminals 6 (VALVE CLOSE POWER) and 10.

1. If no valve motor a-c power is indicated between terminals 7 and 10, restore a-c power.

2. If valve motor a-c power is indicated between terminals 7 and 10 but not between terminals 8 and 10 or 6 and 10, remove the automatic chassis from the controller case and check the valve motor line fuse at the left side of the center panel in the case; replace the fuse if required; if the fuse is satisfactory, de-energize the valve motor supply, remove the manual chassis, and make continuity checks (refer to the Internal Schematic Diagram) of the valve motor control circuitry in the case and both chassis to isolate the fault; restore continuity.

3. If valve motor power is indicated at the appropriate terminals, the fault lies with the control transfer circuit, the oscillator-amplifier, the relay control amplifier, or relay K-1 or K-2; refer to paragraph 5. and troubleshoot the automatic chassis.



## 5. TROUBLESHOOTING, AUTOMATIC CHASSIS COMPONENTS

**a.** Make the test setup shown in figure 1, a (with all SPST switches open, and with switch S-1 at the No. 2 position).

**b.** Close switch S-3 on the test setup; the voltmeter (between pins 13 and 25) should indicate 9 ±5 vdc within one minute.

(1) If the voltmeter does not indicate 9 ±5 vdc, adjust bridge potentiometer R-22 to obtain the proper voltage reading.

(a) If adjusting the bridge potentiometer fails to produce the proper output voltage reading, proceed as follows:

1. With an oscilloscope, check the primary of transformer T-1 for the existence of a 20 KC signal while adjusting potentiometer R-22. Presence of the carrier signal at this point indicates that the trouble is in the detecting power stage.

2. If a carrier signal does not exist at the primary of transformer T-1, check the collector to circuit common voltages of transistors Q-1, Q-2, and Q-3; refer to the Internal Schematic Diagram and the Printed Circuit Diagram for required voltage readings and locations of check points. If all voltages appear to be off, check the amplifier power supply for faulty operation.

3. If all voltages are correct, check the components of the impedance bridge for an open or short circuit.

(b) If an unstable output voltage reading exists that cannot be controlled by the bridge potentiometer, proceed as follows:

1. With an oscilloscope, check the primary of transformer T-1 for the existence of a 20 KC signal. Presence of the carrier signal at this point indicates that the difficulty is in the detecting power stage. Check circuitry (voltages and resistances, see Internal Schematic Diagram) associated with transistor Q-4.

2. Absence of the carrier on the primary of transformer T-1 indicates that the fault lies with the oscillator. Check the bridge components for an open or short circuit.

3. If the previous checks have not isolated the source of trouble, replace bridge diodes CR-2 and CR-3. These diodes are matched for capacity and must be replaced in matched pairs, supplied by Minneapolis-Honeywell Regulator Co.

NOTE: If the bridge diodes must be replaced, avoid handling the replacement diodes.

(2) If the voltmeter indicates 9 ±5 vdc, proceed to step c. which follows:

c. With all SPST switches (figure 1, a) open and with switch S-1 at the No. 2 position, set the rate and reset knobs to 0, and set the PB knob to 50%; close switch S-2, and adjust the output voltage of the 0-24 vdc source to 9.0 vdc; close switch S-4, and open switch S-2; adjust the output voltage of the voltage source to 3.0 vdc, and move switch S-1 to the No. 1 position: the voltmeter reading should decrease by 3.0 ±0.9 vdc.

(1) If the voltmeter reading remains at 9.0 vdc, the control transfer relay (K-3) or the power supply for the driver stage of the relay control amplifier is at fault; refer to the Internal Schematic Diagram and the

661-0001-8

Printed Circuit Diagram and make voltage and resistance checks to isolate the fault; replace any defective components.

(2) If the voltmeter reading changes by some value other than 3.0 ±0.9 vdc. the input or feedback components of the oscillator-amplifier summing junction are at fault; refer to the Internal Schematic Diagram and the Printed Circuit Diagram and make voltage and resistance checks to isolate the fault; replace any defective components.

(3) If the voltmeter reading changes by the proper amount, the fault lies with the relay control amplifier (including its input stage power supply), or with output relays K-1 or K-2; to isolate the fault, proceed to paragraph d. which follows:

**d.** Make the test setup shown in figure 1, b, close switch S-4, and range the output of the millivolt source from 0 to +100 mv and from 0 to -100 mv (by moving switch S-5 to position No. 1 and then to position No. 2).

(1) If each relay operates properly, as indicated by voltmeter and ohmmeter readings (refer to paragraph 3, a., (6)), there is no relay output circuit continuity between the automatic chassis mating connector and the terminal board; restore continuity.

(2) If an audible "click" is detected when the input signal is ranged, but if no voltmeter or ohmmeter indication is obtained, relay contact continuity or continuity of associated wiring in the relay output circuit in the automatic chassis is at fault; restore continuity or replace defective relay.

(3) If no voltmeter or ohmmeter indications of relay contact action are obtained and if no audible "click" can be detected as the input signal is adjusted over its full scale range, increase the amplifier gain by turning the SENSITIVITY adjustment fully clockwise; range the input signal from +100 mv to -100 mv once more.

(a) If neither relay actuates at maximum gain setting, refer to the Internal Schematic Diagram and the Printed Circuit Diagram and make voltage and resistance checks to isolate the fault; replace any defective components.

NOTE: If either relay or any component in the relay control amplifier is replaced, refer to paragraph 3, a., (6) and make any required adjustment of amplifier balance and gain.

(b) If amplifier gain adjustment results in relay contact actions, repeat steps (1) and (2) of this paragraph to isolate the fault.

ELECTR-O-VOLT CONTROL UNIT SERVICE

## 1. GENERAL

**a.** Before attempting to troubleshoot the controller, it will be necessary to fully understand the operation of the unit. The required information is available in sections 1, 3, and 5 of this publication.

**b.** This section provides checkout and troubleshooting data for the automatic and manual chassis of the controller and provides wiring data for the entire unit. The test setups required for checkout procedures are shown in figure 1, a and b; an Internal Schematic Diagram (showing the complete wiring of the case, the manual panel, and the automatic chassis), a Component Layout Diagram (showing the physical locations of components) and a Printed Circuit Diagram (showing voltage check points and voltage readings) are attached to the end of this section.

## 2. TEST EQUIPMENT REQUIRED

The following items, not supplied with the controller, are required to check out and to troubleshoot the controller.

| Item | Used to |
|---|---|
| 120 volt ac, 60 cycle line | Supply power |
| 32-terminal male connector (Amphenol 26-4100-32P) | Supply power to automatic chassis |
| 0-24 volt dc source | Simulate an error signal |
| DC milliammeter, range 0-25 ma | Measure current output |
| Oscilloscope | Trace carrier signal in oscillating amplifier |
| Multimeter, 20,000 ohms per volt | Check voltage and resistance |
| Variable Resistor, 2000 ohms, 1W | Adjust test voltage |
| Resistor, 1000 ohms, 2W | Simulate load output |
| Resistor, 1000 ohms, 1W | Simulate load for manual control power supply |
| Resistor, 1000 ohms | Series resistance for 24-vdc source |
| Switch, 1 (DPTT) | Apply error signal voltages |
| Switch, 1 (SPST) | Short amplifier input |
| Jumper | Tie summing junction to amplifier input |

## 3. CHECKOUT PROCEDURES

**a. AUTOMATIC CHASSIS.** Loosen the two captive screws in the automatic chassis panel, and remove the automatic chassis from the controller case. Procure a 32-terminal male connector that matches the female connector at the rear of the automatic chassis; wire the male connector as shown in figure 1, a, and plug it into the female connector. With a-c power off and all test switches open, perform the following checks:

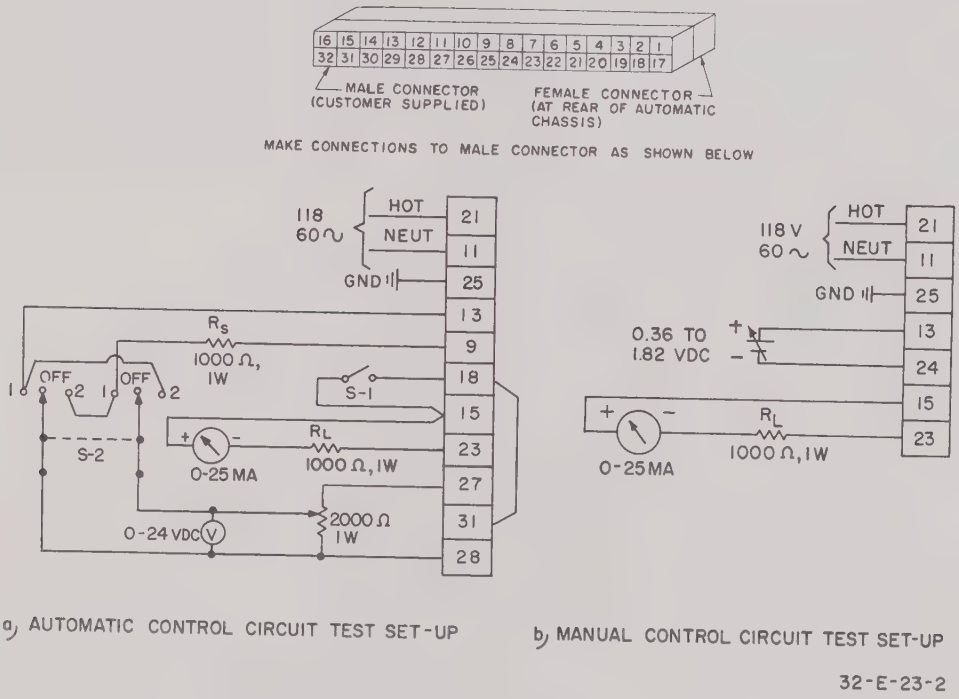


a) AUTOMATIC CONTROL CIRCUIT TEST SET-UP

b) MANUAL CONTROL CIRCUIT TEST SET-UP

32-E-23-2

**Figure 1. ELECTR-O-VOLT Controller, Automatic Chassis Test Set-up.**

(1) Proportional band network

(a) Make the following initial settings:

| | |
|---|---|
| Range Change Tab . . . . | 0.5 to 50% PB, 0 to 10 repeats/min. position (x1 on summing junction capacitors) |
| Proportional Band . . . . | 50% |
| Reset Rate/Min . . . . . | 0 |
| Rate-Min . . . . . | 0 |

(b) Close switch S-1 (to short the amplifier input to reference).

(c) Energize the controller. After one minute the output current milliammeter should indicate 12±6 ma dc; if the required current reading is not obtained, adjust the contact position of potentiometer R-22 on the turret board (see Component Layout Diagram) to obtain the correct indication.

(d) Open switch S-1; the output current reading should remain at 12± - 6 ma dc.

(e) Adjust the output voltage of the variable voltage source to 3 volts, move switch S-2 on the test set-up to position No. 1; the output current reading should immediately decrease to a value which is 4.0 ± 1.2 ma less than the 12 ± 6 ma reading obtained in step (c). ).

(f) Move switch S-2 to the No. 2 position; the output current should immediately increase to a value which is 4.0 ± 1.2 ma greater than the 12 ± 6 ma reading obtained in step (c).

(g) Move switch S-2 to the OFF position when the test is completed.

(2) P.B. adjust circuit

(a) Open switch S-1.

(b) Push and hold the P.B. ADJUST switch; change the P.B. setting and release the P.B. ADJUST switch. The output current reading should not change more than 1% when the switch is actuated or released; the output current should not drift more than 1.0% per minute while the switch is held.

(3) Reset rate

(a) Maintain the initial settings listed in paragraph 3.a., (1), (a).

(b) Close switch S-1; after one minute, the output current meter should indicate a value of 12 ± 6 ma.

(c) Set the RESET-R/MIN adjustment to position 1.

(d) Open switch S-1.

(e) Adjust the output of the adjustable voltage source to 3.0 volts, and move switch S-2 to the No. 1 position; within one minute, the output current should decrease to a value which is 4.0 ± 1.2 ma less than the 12 ± 6 ma reading obtained in step (b).

(f) Close switch S-1; allow one minute for the output current meter to indicate a value of 12 ± 6 ma. Move switch S-2 to the OFF position and open switch S-1.

(g) Move switch S-2 to the No. 2 position; within one minute the output current should increase to a value which is 4.0 ± 1.2 ma greater than the 12 ± 6 ma reading obtained in step (f).

(h) Move switch S-2 to the OFF position when the test is completed.

(4) Range change test

(a) Place the range change tab in the 5 to 500% P.B., 0 to 100 repeats per minute position (x10 on summing junction capacitors).

(b) Adjust the proportional band setting to 500%.

(c) Set the RESET-R/MIN adjustment to zero.

(d) Close switch S-1; allow one minute for the output current meter to indicate a reading of 12 ± 6 ma.

(e) Open switch S-1; the controller output current should remain at 12 ± 6 ma.

(f) Adjust the indicated output of the voltage source to 15-volts.

(g) Move switch S-2 on the test set-up to the No. 1 position; the output current should immediately decrease to a value which is 2 ± 0.6 ma less than the 12 ± 6 ma reading.

(h) Move switch S-2 on the test set-up to the No. 2 position; the output current should immediately increase to a value which is 2 ± 0.6 ma greater than the 12 ± 6 ma reading obtained in step (d).

(i) Move switch S-2 to the OFF position.

(j) Set the RESET-R/MIN adjustment to position 1.

(k) Move switch S-2 to the No. 1 position to apply an input signal of 15-volts; within one minute, the output current should decrease to a value which is 2.0 ± 0.6 ma less than the 12 ± 6 ma reading obtained in step (d).

(l) Move switch S-2 to the No. 2 position; within one minute the output current should increase to a value which is 2.0 ± 0.6 ma greater than the 12 ± 6 ma reading obtained in step (k).

(m) Set the RESET-R/MIN adjustment to zero and move switch S-2 to the OFF position when the test is completed.

(5) Rate time

(a) Place the range change tab in the 0.5 to 50% P.B., 0 to 10 repeats per minute position (x1 on summing junction capacitors).

(b) Adjust the proportional band setting to 20%.

(c) Set the RESET-R/MIN adjustment to zero.

(d) Set the RATE-MIN adjustment to position 1.

(e) Move switch S-2 to the No. 1 position and adjust the output voltage of the 0-24 vdc source until the output current meter indicates a value of 4.0 ma.

(f) Quickly decrease the output voltage of the adjustable voltage source by 0.48 volts (2% step change); the output current reading should immediately increase to 18.4 ma dc; within 37 ± 12 seconds, the output current reading should decrease to 10.4 ma (40% of 16 ma output current span plus 4.0 ma).

(6) Manual control circuit

(a) Make the test setup shown in figure 1, b.

(b) Vary the output voltage of the adjustable voltage source from 0.36 to 1.82 vdc; corresponding output current readings from 4 to 20 ma dc should be obtained.

**b. MANUAL PANEL COMPONENTS.** No operational tests are required for the components mounted on the combined manual panel.*Continuity checks (refer to Internal Schematic Diagram) will suffice for a checkout of all components mounted on the manual panel.

## 4. TROUBLESHOOTING

**a. AUTOMATIC CONTROL CIRCUIT.** If a system failure which can be isolated to the controller occurs during automatic control, proceed as follows:

(1) Remove four screws from the barrier plate at the rear of the controller case, and remove the barrier plate.

(2) Use a multimeter to measure the d-c voltage between terminals 11 (+) and 12 (-) at the terminal panel; the voltage reading should be 24 vdc ± 10%.

(a) If no voltage reading is obtained, check for a-c power at the terminals marked HOT and NEUT (neutral) at the rear of the terminal panel.

1. If no a-c power is indicated, restore a-c power.

2. If a-c power is indicated, loosen the two knurled captive screws on the automatic panel, and remove the automatic chassis from the controller case; check the line fuse located at the center mounting bracket in the controller case; replace fuse if required.

* If a static charge (developed by contact on the face of the % CURRENT meter causes deflection of meter needle, apply an appropriate anti-static lubricant to meter face.

3. If the line fuse is satisfactory, check the continuity of the primary winding of transformer T-2 (between pins 11 and 21 of the automatic chassis plug); replace transformer T-2 if required.

4. If the continuity of the primary winding of transformer T-2 is satisfactory, make the test setup for the automatic chassis as shown in figure 1, a. Measure the output voltage of the slidewire bridge supply; the voltage should be 24 vdc ± 10% between pins 28 (+) and 27 (-) of the automatic chassis plug.

5. If no bridge supply voltage is indicated, check out all components in the bridge power supply to isolate the fault; replace any defective component.

6. If the bridge supply voltage is correct, check case wiring continuity; restore continuity.

(b) If the correct voltage reading is obtained between terminals 11 (+) and 12 (-) at the rear of the terminal panel, proceed to paragraph 4., c. and check out the oscillator-amplifier.

**b. MANUAL CONTROL CIRCUIT.** If a system failure which can be isolated to the controller occurs during manual control, proceed as follows:

(1) Remove the automatic chassis from the controller case and check the line fuse located in the center mounting bracket of the controller case; replace the line fuse, if required.

(2) If the line fuse is satisfactory, use a multimeter to check for a-c power at pins 11 (HOT) and 21 (NEUT) of the automatic chassis mating connector.

(a) If no a-c power is indicated, remove the barrier plate from the rear of the controller case and check for a-c power at the terminals marked HOT and NEUT (neutral).

1. If no a-c power is indicated, restore a-c power.

2. If a-c power is indicated, check continuity of controller case wiring to isolate fault; restore continuity.

(b) If a-c power is indicated at pins 11 and 21, check the continuity of the manual control potentiometer (R-57), the % CURRENT meter, and all wiring associated with the manual control components located in the controller case (refer to the Internal Schematic Diagram).

1. If the continuity check is unsatisfactory, replace the manual control potentiometer or % CURRENT meter, or restore wiring continuity if required.

2. If the continuity check is satisfactory, refer to paragraph (c).

(c) Check the continuity of the primary winding of transformer T-2 (between pins 11 and 21 of the automatic chassis plug); replace transformer T-2 if required.

(d) If the continuity of the primary winding of transformer T-2 is satisfactory, make the test setup shown in figure 1, a, and measure the output voltage of the manual control potentiometer supply, between pins 15 (-) and 29 (+) of the automatic chassis plug; the supply voltage should be approximately 6.0 vdc.

1. If no supply voltage is indicated, check out all components of the supply to isolate the fault; replace any defective components.

2. If the correct supply voltage is obtained, check resistors R-50, R-51, R-52, and R-54 for an open circuit; replace any defective component.

3. If resistors R-50, R-51, R-52, and R-54 are satisfactory, refer to paragraph 4.c., and check out the oscillator-amplifier to isolate the fault.

**c. OSCILLATOR-AMPLIFIER**

(1) Make the automatic chassis test setup shown in figure 1, a.

(2) Supply a-c power.

(3) Close switch S-1 (to short the amplifier input). After one minute, the output current reading should be 12 ± 6 ma. If not, adjust the bridge potentiometer R-22.

(4) If adjusting the bridge potentiometer fails to produce an output, proceed as follows:

(a) With an oscilloscope, check the primary of transformer T-1 for the existence of a 20 KC signal while adjusting potentiometer R-22. Presence of the carrier signal at this point indicates that the trouble is in the detecting power stage.

(b) If a carrier signal does not exist at the primary of transformer T-1, check the collector to circuit common voltages of transistors Q-1, Q-2, and Q-3; refer to the Internal Schematic Diagram and the Printed Circuit Diagram for required voltage readings and location of check points. If all voltages appear to be off, check the amplifier power supply for faulty operation.

(c) If all transistor voltages are correct, check the components of the impedance bridge for an open or short circuit.

(5) If an output current exists that cannot be controlled by the bridge potentiometer, proceed as follows:

(a) With an oscilloscope, check the primary of transformer T-1 for the existence of a 20 KC signal. Presence of the carrier signal at this point indicates that the difficulty is in the detecting power stage. Check circuitry associated with transistor Q-4.

(b) Absence of the carrier on the primary of transformer T-1 indicates that the fault lies with the oscillator. Check the bridge components for an open or short circuit.

(c) If the previous checks have not isolated the source of trouble, replace the bridge diodes CR-2 and CR-3. These diodes are matched for capacity and must be replaced in matched pairs, supplied by Minneapolis-Honeywell Regulator Co.

NOTE: If the bridge diodes must be replaced, avoid handling the replacement diodes.

ELECTR-O-PULSE CONTROL UNIT SERVICE

## 1. GENERAL

**a.** Before attempting to troubleshoot the controller, it will be necessary to fully understand the operation of the unit. This information is available in sections 1, 3, and 5 of this publication.

**b.** This section provides checkout and troubleshooting data for the automatic chassis of the controller and provides wiring data for the entire unit. The test setup required for checkout procedures is shown in figure 1; a Schematic Wiring Diagram (showing the complete wiring of the case, the manual panel, and the automatic chassis), Component Layout Diagrams (showing the physical locations of components), and Printed Circuit Diagrams (showing voltage check points and voltage data) are included at the end of this section.

## 2. TEST EQUIPMENT REQUIRED

The following items, not supplied with the controller, are required to check out and to troubleshoot the controller.

| Item | Used To |
|---|---|
| 120 volt ac, 60 cycle line | Supply power |
| 32-terminal male connector (Amphenol 26-4100-32P) | Supply power to automatic chassis |
| 0-1 1/2 volt variable dc source | Simulate an input signal to the control circuit |
| Oscilloscope | Trace carrier signal in oscillator-amplifier |
| Multimeter, 20,000 ohms per volt | Check voltage and resistance |
| Resistor, 2000 ohms, 1W | Simulate load for slidewire bridge supply |
| Switch 1 (SPST) | Apply error signal voltages to oscillator-amplifier |

661-0003-809

## 3. CHECKOUT PROCEDURES

**a. AUTOMATIC CHASSIS.** Loosen the two captive screws in the automatic chassis panel and remove the automatic chassis from the controller case. Procure a 32-terminal male connector that matches the female connector at the rear of the automatic chassis; wire the male connector as shown in figure 1 and plug it into the female connector. With a-c power off, and with switch S-1 open, perform the following checks:

(1) Proportional Band Network

(a) Make the following initial settings:

PROP. BAND - % . . . . . 20

RESET RATE (R/MIN) . . . . . 0

CYCLE TIME . . . . . Mid Range

(b) Connect a jumper between terminals 9 and 25 of the 32-terminal connector; connect clip leads between chassis ground and terminals #4 and #5 of capacitor C-2.

(c) Remove the clip leads (but leave jumper between terminals 9 and 25 of the 32-terminal connector).

(d) Energize the controller.

(e) Adjust the CYCLE TIME knob to its maximum clockwise position and observe that the LOAD-ON lamp cycles; adjust the CYCLE TIME knob to obtain a convenient cycle time for the following test procedures (approximately five seconds per cycle); note that the LOAD-ON lamp is energized during the on-time and deenergized during the off-time of the time cycle.

(f) Remove the jumper between terminals 9 and 25.

(g) Adjust the input voltage from zero to 0.48 volts.

(h) Observe the percent on-time per time cycle; the percent on-time should decrease from its previous reading.

(2) Reset Rate

(a) Maintain all settings listed in the preceding paragraph including the input voltage of 0.48 volts dc.

(b) Turn RESET RATE knob to position 1.

(c) After one minute, turn RESET RATE knob to position O.

(d) Observe percent on-time per time cycle; the percent on time should decrease by an additional 10±3% from the value obtained in the preceding paragraph.

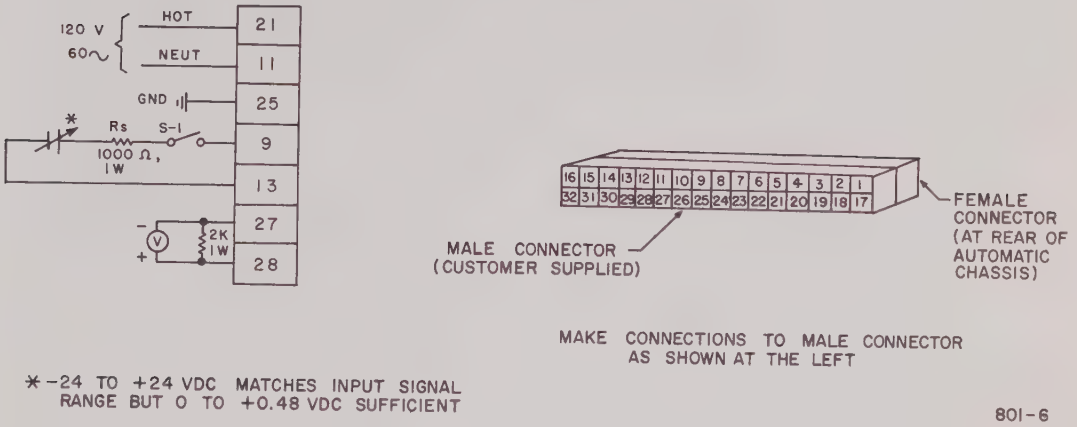


Figure 1. ELECTR-O-PULSE Controller, Automatic Chassis Test Setup

**b. MANUAL PANEL.** No checkout procedures are required for the components of the manual panel.

## 4. TROUBLESHOOTING, AUTOMATIC CONTROL CIRCUIT, PRELIMINARY PROCEDURES

If the source of system failure has been isolated to the controller, proceed as follows:

NOTE: The following procedures are for a system failure which occurs during automatic control only; if a failure occurs during manual control, the only controller faults which could cause system failure would be lack of continuity between terminals 19 and 20 and the AUTO-MANUAL switch or a defect in the AUTO-MANUAL switch.

a. If the power-on (ON) pilot lamp on the manual panel is deenergized, remove the automatic chassis from the controller case and check the instrument line fuse at the right side of the center frame inside the controller case.

(1) Replace the instrument line fuse, if required.

(2) If the fuse is satisfactory, remove the barrier plate at the rear of the terminal panel and use a multimeter to check for a-c instrument power at the terminals marked HOT and NEUT (neutral).

(a) If no a-c power is indicated at terminal panel, restore a-c power.

(b) If a-c power is indicated, remove the manual panel and check for a-c power at the input and output terminals of the instrument power ON-OFF switch (if supplied).

1. Replace the instrument power ON-OFF switch, if required.

2. Restore case wiring continuity, if required.

**b.** If the power-on (ON) lamp on the manual panel is energized but if the LOAD-ON lamp does not cycle and if no audible clicks (associated with relay contact action) can be detected, either of two methods may be chosen. The following steps may be performed and then the operation of the oscillator-amplifier can be checked, or vice-versa; the former method, however, eliminates a greater number of faults in fewer steps (using simpler techniques and equipment) than the second and may be the more direct in the majority of cases.

(1) Remove the automatic chassis and use a multimeter to check for instrument a-c power at terminals 21 (hot) and 11 (neutral) of the automatic chassis mating connector; if no a-c power is indicated at terminals 21 and 11 of the mating connector, check continuity of the AUTO-MANUAL switch and continuity of appropriate case wiring.

(a) Replace AUTO-MANUAL switch, if required.

(b) Restore continuity of case wiring, if required.

(2) If a-c power is indicated at terminals 21 and 11 of the mating connector, check the continuity of the primary winding of transformer T-2 (between terminals 21 and 11 of the automatic chassis plug).

(a) If no continuity is indicated, replace transformer T-2.

(b) If the continuity of the primary winding of transformer T-2 is satisfactory, check out the oscillator-amplifier (refer to paragraph 4.d.).

**c.** If the LOAD-ON lamp cycles correctly, check the load circuit, the bridge supply voltage, and the slidewire bridge as follow:

(1) When the LOAD-ON lamp is energized, check for continuity between terminals 14 and 15 at the rear of the terminal panel.

(2) When the LOAD-ON lamp is deenergized, check for continuity between terminals 13 and 14 at the rear of the terminal panel.

(3) If no continuity exists in either of the preceding steps, check continuity of case wiring and check relay K-1 for faulty contacts; restore continuity or replace relay K-1, if required.

(4) If the fault does not lie with the load circuit, make the test set-up shown in figure 1; use a multimeter to measure the voltage across terminals 28(+) and 27(-) of the automatic chassis plug; the voltage reading should be 24 vdc ± 10%.

(a) If an incorrect voltage reading is obtained, check out all components of the slidewire bridge (or proportioning resistor) supply; replace any defective component.

(b) If the correct voltage reading is obtained, a fault in case wiring continuity or a defective slidewire bridge (or proportioning resistor), located in the measuring instrument, may be the cause of system

failure; measure the resistance between pins 9 and 13 of the automatic chassis mating connector; the resistance reading should be approximately 2000 ohms; if not, restore continuity or replace the proportioning resistor in the measuring instrument.

**d.** If the LOAD-ON lamp does not cycle, check oscillator-amplifier operation as follows:

NOTE: The following procedures are also to be followed if the cause for no cycling of the LOAD-ON lamp (and relay K-1) has not been disclosed by the procedures of paragraph 4.b.

(1) Make the test setup shown in figure 1 (with switch S-1 open and with line power off).

(2) Short the amplifier input by connecting a jumper between taper pin #5 on the amplifier board and the turret terminal on the upper front corner of the turret board.

(3) Measure the voltage across the coil of relay K-1 (from the red to the red-white wire on the relay); the voltage reading should be 10 ± 6 vdc.

(a) If the correct voltage is not indicated, remove the snap-out plug in the turret board cover and adjust potentiometer R-22 to obtain the correct voltage reading.

1. If adjusting potentiometer R-22 does not result in the correct voltage reading, use an oscilloscope to check the primary of transformer T-1 for the existence of a 20 KC signal while adjusting potentiometer R-22. Presence of the carrier signal at this point indicates that the trouble is in the detecting power stage.

2. If a carrier signal does not exist at the primary of transformer T-1, check the collector to circuit common voltages of transistors Q-1, Q-2, and Q-3; refer to the Internal Schematic Diagram and the Printed Circuit Diagram for required voltage readings and locations of check points. If all voltages appear to be off, check the amplifier power supply for faulty operation.

3. If all voltages are correct, check the components of the impedance bridge for an open or short circuit.

(b) If an unstable output voltage reading exists that cannot be controlled by the bridge potentiometer, proceed as follows:

1. With an oscilloscope, check the primary of transformer T-1 for the existence of a 20 KC signal. Presence of the carrier signal at this point indicates that the difficulty is in the detecting power stage. Check circuitry (voltages and resistances, see Internal Schematic Diagram) associated with transistor Q-4 and check continuity of the coil of relay K-1.

2. Absence of the carrier on the primary of transformer T-1 indicates that the fault lies with the oscillator. Check the bridge components for an open or short circuit.

3. If the previous checks have not isolated the source of trouble, replace bridge diodes CR-2 and CR-3. These diodes are matched for capacity and must be replaced in matched pairs, supplied by Minneapolis-Honeywell Regulator Co.

NOTE: If the bridge diodes must be replaced, avoid handling the replacement diodes.

(c) If the voltmeter indicates 10 ± 6 vdc, proceed to step (4) which follows:

(4) Make the following settings on the automatic chassis panel:

PROP. BAND - % . . . . . 20

RESET RATE (R/MIN) . . . . . 0

CYCLE TIME . . . . . Mid Range

(5) Using the test setup shown in figure 1 (with switch S-1 closed and with a-c power supplied), adjust the input voltage to 0.48 volts d-c; on-time per time cycle should be from 27 to 53% of the full time cycle. If correct on-time per time cycle is not obtained, proceed as follows:

(a) Deenergize line supply, open switch S-1, and connect clip leads from terminals #4 and #5 of capacitor C-1 to chassis ground.

(b) Energize controller, close switch S-1 to apply 0.48 volt (dc) signal. If the on-time per time cycle is still not correct, the fault lies with the feedback or input components of the oscillator-amplifier summing junction. Check the following items to eliminate the fault:

1. Check the proportional band power supply voltage (approximately 12 volts, dc, across diode CR-15), check the continuity of the proportional band potentiometer and resistor R-40, and check for continuity between the proportional band supply and the amplifier reference.

2. Check continuity of resistors R-39, R-38, and of the CYCLE TIME potentiometer; also check capacitors C-1, C-2, and C-3.

(6) Maintain the control mode settings listed in the preceding paragraph including the input voltage of 0.48 volts dc.

(7) Turn the RESET RATE knob to position 1; after one minute, turn RESET RATE knob to position O; if on-time per time cycle does not decrease by 10 ± 3% from previous reading, check the continuity of resistors R-1 and R-2 and check the continuity of the reset potentiometer and all associated wiring for the reset circuit.

## DIFFERENTIAL MECHANISM

## SERVICE

To align the differential mechanism:

**a.** Remove the chart and chart plate.

**b.** Remove the control link (figure 1), then replace the chart and chart plate.

NOTE: Instrument shown has AIR-O-LINE control; however, this procedure applies to all versions of pneumatic control.

**c.** Set pen to 55 per cent of full scale.

**d.** Adjust set point index until a .040-inch diameter pin can be inserted through the hole in the index center and the hole in the differential lever.

**e.** With the pin inserted, the pen and index should line up at the 55 per cent mark. If the pen and index do not align properly, adjust the calibration screw to obtain proper alignment.

**f.** Remove chart and chart plate and reinstall the control link (to position A for direct-action, or B for reverse-action).

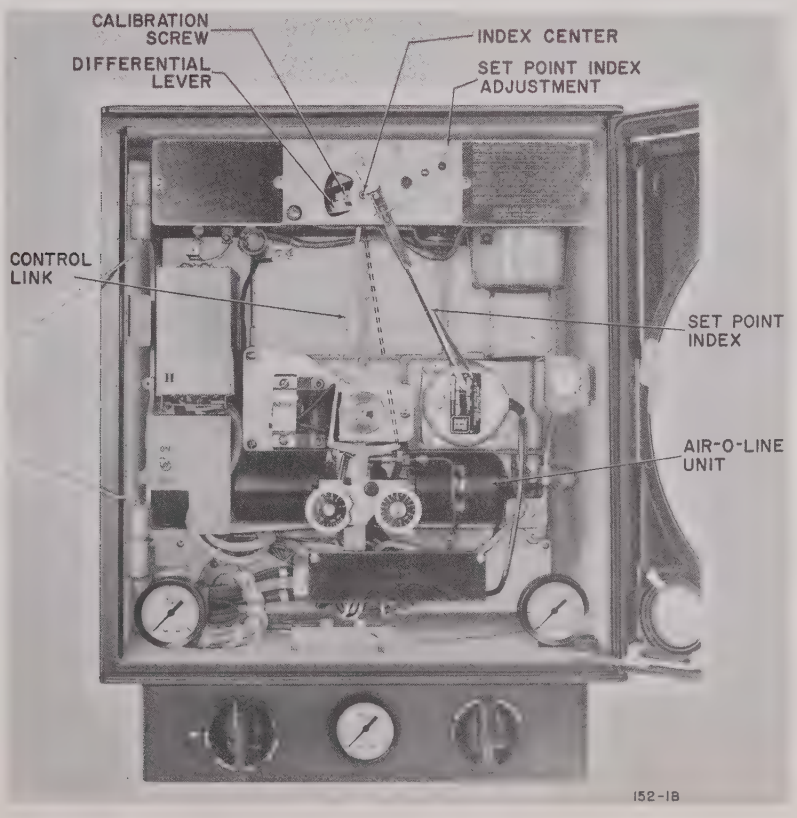


Figure 1. Circular Chart Instrument with Chart and Chart Plate Removed.

**DIFFERENTIAL MECHANISM** **SERVICE**

## 1. GENERAL

The accessory bag supplied with the instrument contains alignment tool (figure 1), Honeywell part No. 360616, and a .041-inch diameter pin, which are required for checking and adjusting alignment of the differential mechanism.

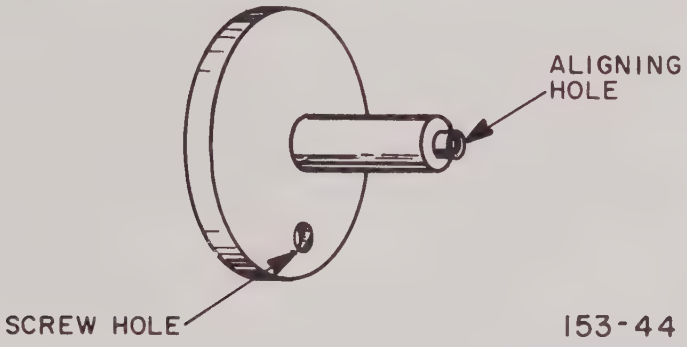


Figure 1. Alignment Tool

## 2. ALIGNMENT PROCEDURE

**a.** Switch off power to instrument.

**b.** Align pen and set point index at 55 per cent of full scale.

**c.** Disconnect differential link from differential lever (see figure 2).

**d.** Assemble alignment tool to surface of gear sector with screw provided; make screw slip-tight only, since tool must be free to swing in limited arc.

**e.** While holding tool flat against gear sector, align hole on differential linkage with hole at end of tool shaft, using differential linkage adjustment.

**f.** Check alignment of holes with .041-inch diameter pin; remove pin.

**g.** Adjust pen and set point index to 10 per cent of full scale and check alignment of holes.

**h.** Adjust set point index and pen to 90 per cent of full scale and check alignment of holes.

**i.** Disassemble tool from gear sector.

**j.** If it is not possible to obtain alignment of holes under any one of the conditions stated above, inspect assemblies shown in figure 2 and replace any parts suspected of being defective.

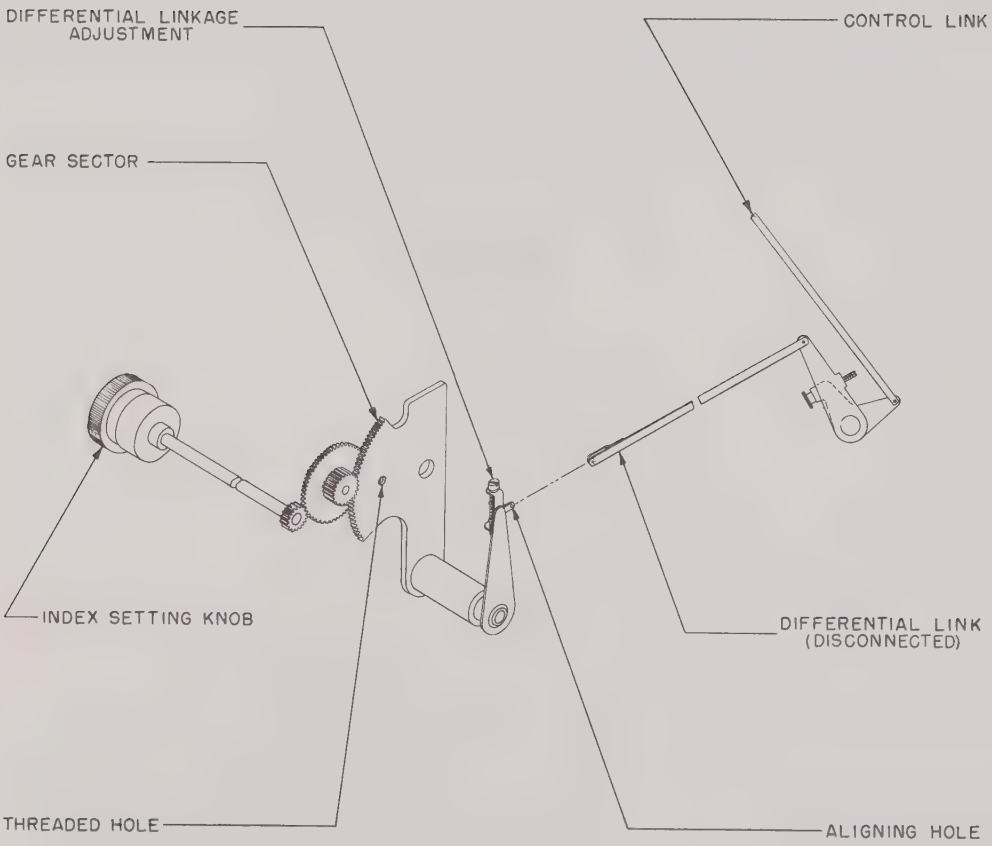


Figure 2. Differential Mechanism.

## INDEX DRIVE CABLE

## SERVICE

### 1. CABLE REMOVAL.

a. Loosen clamping screw in set point index (fig. 1) and disengage cable from index.

b. Remove screw from center of index knob (fig. 2). Remove the knob.

c. Slip end of cable out of slot in index knob.

d. Remove cable from pulley at left end of scale.

e. Unwind cable from cable drum and slip end sleeve out of cable drum slot.

f. Remove cable, taking care not to kink it.

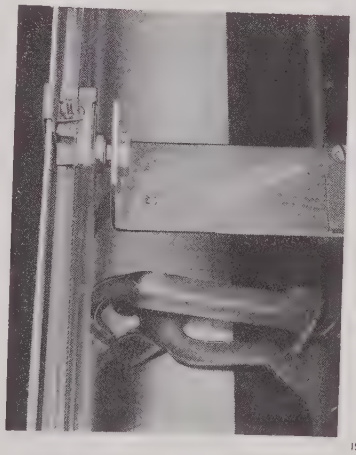

153-24

Figure 1. Top view of strip chart showing index cable.

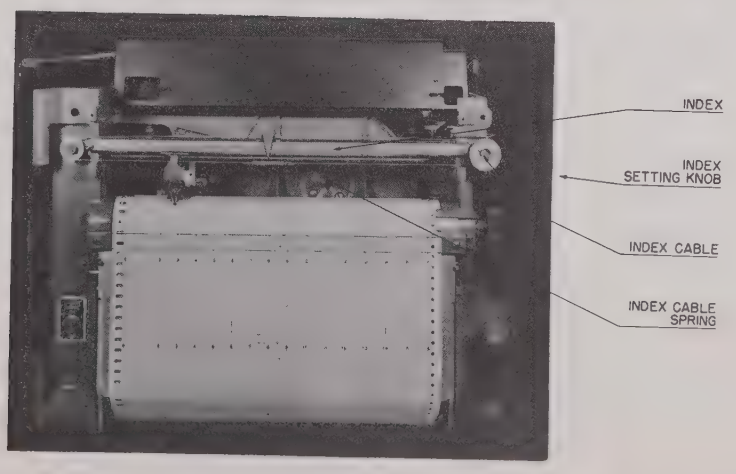


153-25

Figure 2. Strip Chart Contact Controller with scale removed.

## 2. CABLE INSTALLATION

a. Take end of longer section of cable and place end sleeve in slot of cable drum so that it catches in slot.

b. Swing chassis out of case.

c. Turn small knurled pinion on end of cable drum shaft to counter-clockwise limit.

d. Wind cable 4-1/2 turns counterclockwise in grooves around drum.

e. Bring cable over pulley at left end of scale.

f. Bring short, end of cable over cable drum one half turn counter-clockwise.

g. Slip cable sleeve through slot in index knob.

h. Assemble index knob to cable drum with screw but do not tighten it.

i. Hold drum and turn index knob until take-up spring in cable is stretched approximately 0.5 inch beyond its relaxed length.

j. Tighten screw to hold index knob in position.

k. Turn index knob until take up spring is at approximately mid-scale (figure 2).

l. Move set point index by hand until it is at approximately mid-scale.

m. Place drive cable under cable clamp and fasten it in place.

n. Refer to "ALIGNMENT OF PEN AND SET POINT INDEX" in contact control components service section and check alignment.

## INDEX DRIVE CABLE

## SERVICE

### 1. CABLE REMOVAL

a. Swing out chassis.

b. Remove screw from center of index knob on upper cable drum and remove knob. Tension will be released and cable can then be removed easily.

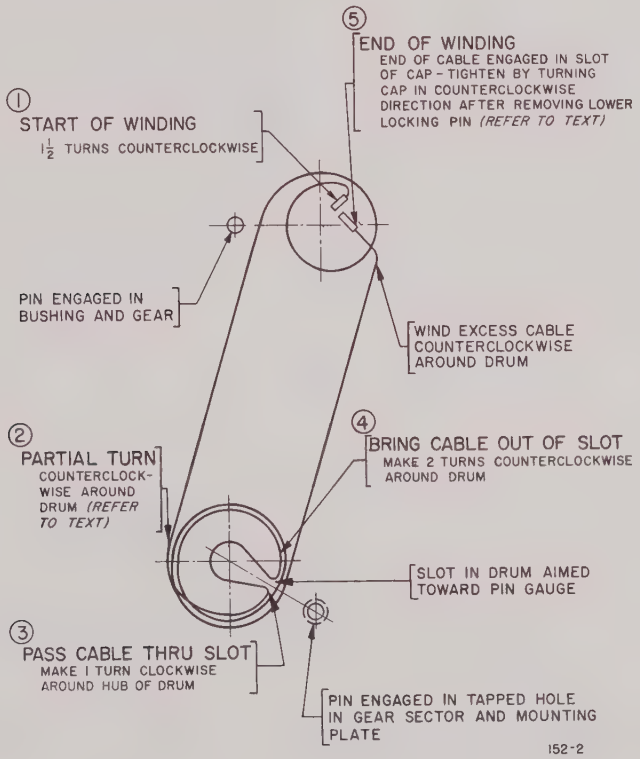


Figure 1. Schematic Arrangement of Set Point Index Cable

### 2. CABLE INSTALLATION (Refer to figure 1).

a. Loosen rear set screw in connector shaft. Line up hole in gear and upper cable drum assembly with hole in back bearing plate. Insert a 3/32-inch (.093-inch) diameter locking pin (or use slidewire locking pin, Part No. 76571) through tapped hole in gear sector and mounting plate.

b. Engage a second locking pin 3/32" (.093) dia. through tapped hole in gear sector and mounting plate.

NOTE: Slot in lower cable drum pulley should point toward lower locking pin. If pulley does not fall in this position remove cotter and pulley, and reposition pulley as shown in fig. 1.

c. Place one end of cable (Part No. 77050-3 measuring 35 inches) through slot of upper cable drum, with cable coming out of top of drum.

d. Draw cable through slot until cable sleeve catches in it.

e. Wind cable one and one-half (1-1/2) turns counterclockwise then take cable down to lower cable drum. Keep cable to right of spring loaded tension pulley.

f. With slot of lower cable drum pointed toward locking pin, wind cable a partial turn counterclockwise around drum, through slot in drum, then make one (1) turn clockwise around hub of drum and out through slot.

NOTE: Make sure that drive cable on its turn around hub is not in between hub and washer.

g. Wrap cable two (2) turns counterclockwise around drum, then take cable up to upper cable drum.

h. Engage end of cable in slot of cable drum cap and wind excess cable counterclockwise around upper cable drum.

i. Fasten cap with cap screw. (Do not tighten cap screw at this time).

j. Remove lower locking pin and tighten cable by turning cap counter-clockwise until stop pin rests in center of hole in tension pulley bracket. Tighten cap screw.

k. Remove top locking pin and check that cable does not wind on top of itself, nor that it has slipped down between cap and drum.

l. Rotate upper cable drum fully counterclockwise. Set index to 96.5% full scale. Tighten rear set screw in connector shaft.

m. Refer to "ALIGNMENT OF PEN AND SET POINT INDEX" in contact control components service section and check alignment.

**CONTROL UNIT** **SERVICE**

## 1. GENERAL

Troubleshoot the ELECTR-O-VANE control unit by making the checks contained in this section in the order given. Replace parts suspected of being defective. To obtain replacement parts, refer to the parts list section and order individual parts or assemblies by Honeywell part number, from Brown Instruments Division.

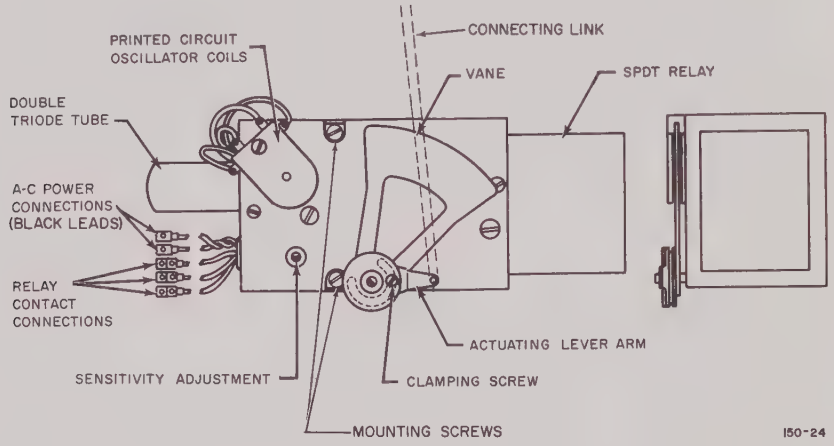


Figure 1. ELECTR-O-VANE Control Unit.

## 2. VISUAL CHECKS

a. Remove instrument chart and plate. Make sure connecting link is connected to actuating lever arm (see fig. 1) and that clamping screw is tight.

b. If vane is bent or otherwise damaged, obtain and install replacement vane and lever assembly and refer to operation section for switching adjustments.

c. If vacuum tube filament is not glowing:

(1) Trace black leads (fig. 1) to terminal board and make sure connections are intact.

(2) Check for correct supply voltage. If supply voltage is correct, shut off power and check across black leads for continuity through transformer primary.

(3) Remove vacuum tube and measure resistance of filament winding across tube sockets 4 and 9 (see figs. 2 and 3); resistance should be approximately 1.0 ohm.

d. If vacuum tube filament is glowing:

(1) Remove black plastic relay cover and disconnect connecting link from actuating lever.

(2) Manually move vane between oscillator coils while observing relay.

(3) If relay is energized but fails to operate properly because of damage or sticking contacts, replace relay.

(4) If relay is not energized, tag and disconnect leads from terminal board, remove mounting screws (fig. 1) and remove unit from the instrument chassis.

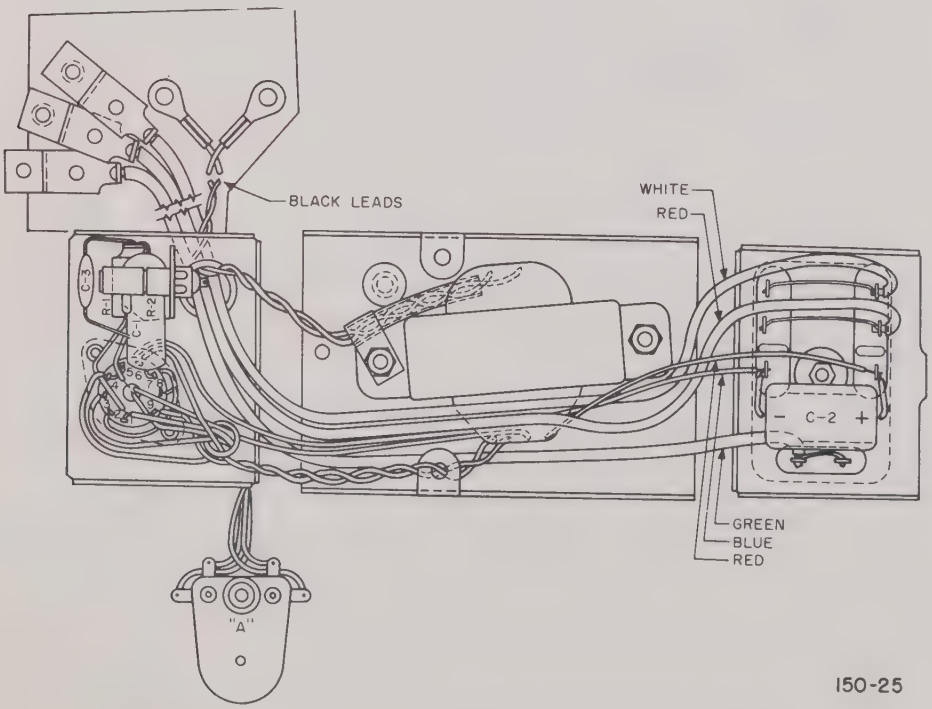


Figure 2. Component Layout Diagram of ELECTR-O-VANE Unit

## 3. RESISTANCE CHECKS

a. Remove vacuum tube from socket.

b. Refer to chart below and figs. 2 and 3. Unless stated otherwise, terminal numbers in left-hand column designate terminals in tube socket.

**CONTROL UNIT** **SERVICE**

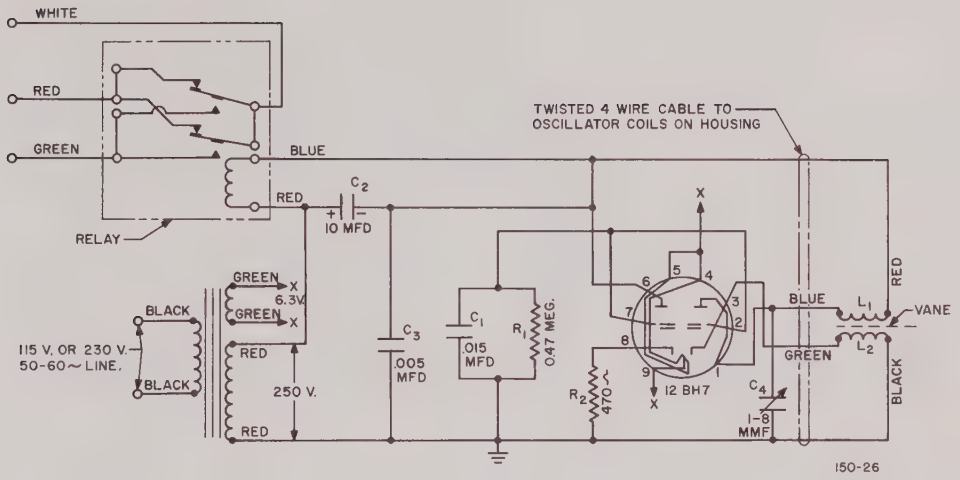


Figure 3. Schematic Wiring Diagram of ELECTR-O-VANE Unit

| Measure between | Component measured | Resistance |
|---|---|---|
| Terminal 3 and gnd. | $L_2$ oscillator coil | 0.5 ohm (approx.) |
| Terminals 1 and 6 | $L_1$ oscillator coil | 0.5 ohm (approx.) |
| (+) terminal of C-2 and terminal 6 | Capacitor C-2 and relay coil<br>NOTE: Very low resistance indicates defective capacitor; very high resistance indicates open relay coil. | 5500 ± 550 ohms |
| (+) terminal of C-2 and gnd. | High voltage winding of transformer. | 500 ± 50 ohms |
| Terminals 4 and 5 | Soldered jumper at filament connections. | zero ohms |
| Terminal 7 and gnd. | $R_1$ and $C_1$<br>NOTE: Very low resistance indicates defective capacitor | 0.47 ± .094 megohm |
| Terminal 8 and gnd. | Resistor $R_2$ | 470 ± 47 ohms |

## 4. VOLTAGE CHECKS

a. Make following checks with vacuum tube out of socket. Par. 2, c, (2) applies. Connect supply voltage to black leads. Refer to following chart.

| Measure between | Voltage measured | Voltage |
|---|---|---|
| Terminals 4 and 9 | Filament voltage | 6.3 volts ac |
| Terminal 1 and gnd. | Plate voltage | 250 ± 25 volts ac |
| Terminal 6 and gnd. | Plate voltage | 250 ± 25 volts ac |

b. Make the following checks with vacuum tube installed in socket. Note that in each check, voltage readings are to be made with vane between coils and with vane withdrawn from coils.

| Measure between | Voltage measured | Vane between coils | Vane withdrawn from coils |
|---|---|---|---|
| (+) terminal of C-2 and terminal 6 | Relay voltage | 70 volts dc (approx.) | 5 to 10 volts dc |
| Terminal 7 and gnd. | Grid bias | zero | -20 volts dc (approx.) |
| Terminal 8 and gnd. | Cathode bias | 3 volts dc (approx.) | 0.5 volts dc (approx.) |

c. If correct voltages are not obtained in par. b, above, replace vacuum tube. A replacement tube can be obtained from Brown Instruments Division (specify Honeywell part no. 353308-3) or from any reputable source of electrical equipment.

# PNEUMATIC CONTROL COMPONENTS (ON-OFF)

SERVICE

## 1. GENERAL

a. Causes of faulty control not due to obvious mechanical defects such as broken, damaged, or missing parts are best determined by following a systematic troubleshooting procedure such as given below. Take all steps in the order given until the faulty condition is found and corrected.

b. When an adjustment is made, allow about one minute for the system to respond before attempting to observe and analyze the effect.

c. Except for minor differences in design, control units in strip chart and circular chart instruments are identical. Procedures in this section apply to control units in both types of instruments.

## 2. TROUBLESHOOTING PROCEDURES

a. **PRELIMINARY CHECKS.** Maintenance procedures performed too infrequently can result in faulty operation of control components. Refer to the maintenance section for pneumatic control components and perform the steps given there. If the trouble is not eliminated, proceed as follows:

b. **EXTERNAL ACCESSORIES.**

(1) Inspect pressure regulator in supply line for defects, especially the diaphragm. Make sure exhaust port in regulator and supply line are not blocked.

(2) Use a soap solution to check control system piping for leaks, especially line from pilot relay (on rear wall of case in lower left-hand corner) to final control element. Tighten leaking connections, replace leaking tubing.

(3) Check linkage of air-operated controllers for excessive friction.

c. **CONTROLLED AIR.**

(1) If pilot relay has bypass lever, refer to operation section for pneumatic control two-position bypass lever and switch to manual control. If the pilot relay does not have bypass lever, disconnect controlled air line from final control element, plug controlled air line and operate final control element manually. Refer to instructions provided by manufacturer of final control element for inspection and test procedures and check element.

(2) If instrument is a circular chart recorder, remove the chart and chart plate.

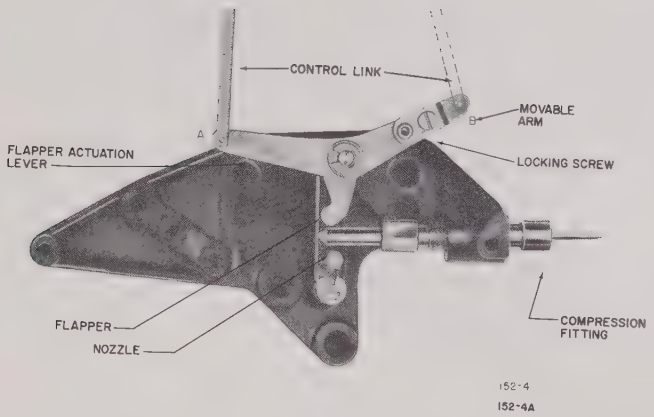


Figure 1. On-Off Control Unit on Circular Chart Recorder

(3) Examine flapper-nozzle system (fig. 1) for damaged parts. Make sure control link is properly connected to differential lever and flapper actuation lever. Replace damaged parts.

(4) Refer to figure 1. Visually check flapper alignment. To facilitate checking, remove flapper actuating lever after removing cotter. If flapper is twisted or bent, replace it. If flapper does not appear to be at right angles to nozzle, loosen compression fitting and screw nozzle in or out until flapper is square with nozzle. Hold nozzle in position and tighten compression fitting.

(5) Hold flapper away from nozzle; controlled air pressure should drop to 1 psi or less. Seal nozzle port with finger; controlled air pressure should rise to 19 psi or higher. If not, recheck nozzle connections for leakage, if nozzle was adjusted in step (4).

(6) Reinstall flapper actuating lever.

**d. PILOT RELAY CHECKS**

(1) Pilot relay is located on rear wall of case in lower left-hand corner. Swing out chassis, if necessary. If air line from controlled air pressure gage connects to center of round cover plate of pilot relay, disconnect it from plate.

(2) Remove six screws, cover plate, and disc flapper assembly.

(3) Hold flapper of on-off control unit away from nozzle. Alternately seal and open nozzle port with finger over end of nozzle of on-off unit while observing exhaust nozzle in center of pilot relay. Exhaust nozzle must move smoothly in and out. If not, check connection of nozzle line to pilot relay for leaks. If correct operation is not obtained, replace pilot relay.

(4) Make sure neoprene face of disc flapper assembly is free of dirt. Replace flapper, if neoprene is cut or grooved.

(5) Reassemble disc flapper and cover plate and reconnect air line, if disconnected in step (1). If pilot relay hums or chatters as pressure builds up, remove plate and rotate flapper assembly about 90 degrees.

**e. ALIGNMENT CHECK.** Refer to separate service section and check alignment of differential mechanism.

**f. CONTROLLED AIR PRESSURE CHECKS AND ADJUSTMENTS**

(1) Make sure control link is connected to point A, fig. 1 (direct-acting control, i.e., controlled air pressure increases as value of measured variable increases).

(2) Align pen and set point index at 55 per cent of full scale; if controlled air pressure is not between 5 and 10 psi, adjust nozzle slightly to obtain this pressure.

(3) Adjust set point index to a position slightly upscale (0.5 per cent full scale) of pen; controlled air pressure should decrease to minimum (less than 0.5 psi).

(4) Similarly, adjust set point index to a position slightly downscale of pen; controlled air pressure should increase to maximum (at least 15 psi).

(5) If not, readjust nozzle slightly and repeat steps (3) and (4) until correct result is obtained. Or, as an alternate method for circular chart recorders, adjust set point index to point where pressure changes to minimum or maximum, then use calibration screw (see separate service section on alignment of differential mechanism) to realign set point index with pen; repeat steps (3) and (4) to check results.

(6) Connect control link to point B fig. 1 (reverse-acting control, i.e., controlled air pressure decreases as value of measured variable increases).

(7) Repeat steps (3) and (4), however, look for opposite result in each step. If not obtained, loosen locking screw (fig. 1), manually adjust movable arm and repeat steps (3) and (4) until correct result is obtained. Tighten locking screw.

(8) Reconnect control link to point A, if direct-acting control is desired.

# PNEUMATIC CONTROL COMPONENTS (THROTTLOR) SERVICE

## 1. GENERAL

a. Causes of faulty control not due to obvious mechanical defects such as broken, damaged, or missing parts are best determined by following a systematic troubleshooting procedure such as given below. Take all steps in the order given until the faulty condition is found and corrected.

b. When an adjustment is made, allow about one minute for the system to respond before attempting to observe and analyze the effect.

c. Except for minor differences in design, control units in strip chart and circular chart instruments are identical. Procedures in this section apply to control units in both types of instruments.

d. The adjustments described will improve the operation of the automatic control system; however, the quality of control may be affected by variables such as pulsations in the flow line of an auxiliary flow controller or external vibration.

## 2. TROUBLESHOOTING PROCEDURES

**a. PRELIMINARY CHECKS.** Failure to follow a periodic schedule of maintenance procedures can result in faulty operation of control components. Refer to the maintenance section for pneumatic control components and perform the steps given there. If the trouble is not eliminated, proceed as follows.

**b. EXTERNAL ACCESSORIES**

(1) Inspect pressure regulator in supply line for defects, especially the diaphragm. Make sure exhaust port on regulator and supply line are not blocked.

(2) Use a soap solution to check control system piping for leaks, especially line from pilot relay (on rear wall of case in lower left-hand corner) to final control element. Tighten leaking connections, replace leaking tubing.

(3) Check linkage of air-operated controllers for excessive friction.

**c. CONTROLLED AIR**

(1) If control system includes a bypass panel, switch to TEST position (for operating instructions, refer to bypass panel operation section). If the bypass panel is not included, disconnect controlled air line from final control element. To control process manually, connect a manually regulated air supply to the final control element. Refer to instructions provided by manufacturer of final control element for inspection or test procedures, and check element.

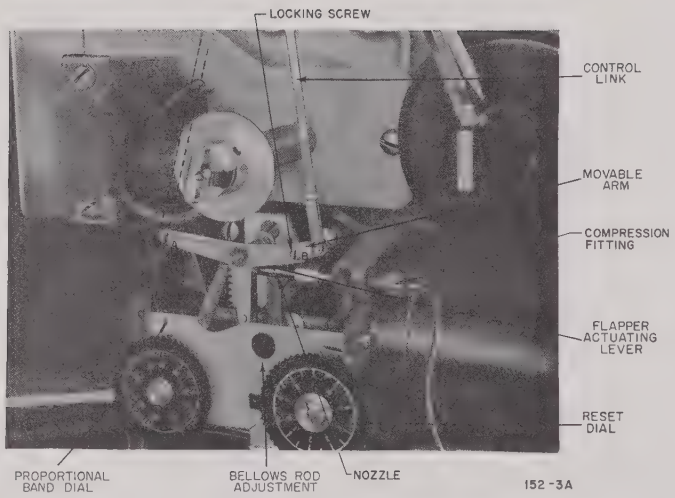


Figure 1. Full THROTTLOR Control Unit on Circular Chart Recorder

(2) If instrument is a circular chart recorder, remove the chart and chart plate.

(3) Examine lever system of THROTTLOR unit (fig. 1) for damaged parts, disconnected spring, etc. Make sure linkage from differential lever to flapper actuating lever is intact. Replace damaged parts.

NOTE: Before disassembling any part of the instrument or removing the instrument from service, place bypass control panel in "SERVICE" position (refer to bypass panel operation section). If the instrument does not have a bypass panel, the final control element must be operated manually while the instrument is being serviced.

(4) Refer to figure 1. Visually check flapper alignment. To facilitate checking, remove flapper actuating lever after removing cotter. If flapper is twisted or bent, replace it. If flapper does not appear to be at right angles to nozzle, loosen compression fitting and screw nozzle in or out until flapper is square with nozzle. Hold nozzle in position and tighten compression fitting.

(5) Hold flapper away from nozzle; controlled air pressure should drop to 1 psi or less. Seal nozzle port with finger; controlled air pressure should rise to 19 psi or higher. If not, recheck nozzle connections for leakage, if nozzle was adjusted in step (4).

NOTE: A schematic view of the complete THROTTLOR control system is included in the pneumatic control components theory section of this manual.

(6) If fault is not corrected, check for leaks in air line from nozzle to pilot relay. Reinstall flapper actuating lever then perform pilot relay checks.

**d. PILOT RELAY CHECKS**

(1) Pilot relay is located on rear wall of case in lower left-hand corner. Swing out chassis, if necessary. If air line from controlled air pressure gage connects to center of round cover plate of pilot relay, disconnect it from plate.

(2) Remove six screws, cover plate, and flapper disc assembly.

(3) Hold flapper of THROTTLOR unit away from nozzle. Alternately seal and open nozzle port with finger over end of nozzle of THROTTLOR unit while observing exhaust nozzle in center of pilot relay. Exhaust nozzle must move smoothly in and out. If it does not move or if movement is jerky, check connections of line from nozzle to pilot relay for leaks. If correct operation cannot be obtained, replace pilot relay.

(4) Make sure neoprene face of flapper disc is free of dirt. If neoprene is cut or grooved, inspect nozzle for rough edges or worn spots. If nozzle is not in good condition, unscrew nozzle assembly and install a replacement. Turn new nozzle assembly in as far as it will go but DO NOT tighten excessively. Replace flapper disc assembly, if neoprene is cut or grooved.

(5) Reassemble flapper disc assembly and cover plate and reconnect air line, if disconnected in step (1). If pilot relay hums or chatters as pressure builds up, remove plate and rotate flapper disc assembly about 90 degrees.

**e. ALIGNMENT CHECK.** Refer to separate service section and check alignment of differential mechanism.

**f. TEMPORARY SCALE FOR CIRCULAR CHART RECORDER.** To prevent need for frequent removal and reinstallation of chart and chart plate during subsequent checks and adjustments, proceed as follows. Cut a sector including the hub from a used chart. To stiffen sector, glue it on heavier paper. Install sector and rotate chart hub until sector is under the pen tip.



**g. CONTROLLED AIR PRESSURE CHECKS AND ADJUSTMENTS**

(1) Make sure control link is connected to point A (figure 1), the direct-acting position. (Position A is at left-hand end of flapper actuation lever whether instrument is circular chart type shown in figure 1 or strip chart type.)

(2) Align pen and set point index at 55 per cent of full scale.

(3) Set proportional band dial at 10 on limited THROTTLOR, 40 on full THROTTLOR.

(4) Adjust reset (knurled shaft on limited THROTTLOR, dial on full THROTTLOR) until controlled air pressure is 7.5 psi.

(5) On limited THROTTLOR, turn proportional band dial from 10 to 2 then back to 10. If controlled air pressure increases by more than 0.2 psi as dial is turned from 10 to 2, loosen compression fitting and adjust nozzle away from flapper; if control air pressure decreases by more than 0.2 psi, adjust nozzle toward flapper. Lock adjustment by tightening compression fitting.

(6) On full THROTTLOR, turn proportional band dial from 40 to 10 to 100 then back to 40. If controlled air pressure increases by more than 0.2 psi as dial is turned from 10 to 100, loosen compression fitting and adjust nozzle away from flapper; if controlled air pressure decreases by more than 0.2 psi, adjust nozzle toward flapper. Lock adjustment by tightening compression fitting.

(7) Readjust reset until controlled air pressure returns to 7.5 psi.

(8) Repeat steps (5) and (7) or (6) and (7) until controlled air pressure does not change by more than 0.2 psi.

(9) Change control link connection to point B (fig. 1). Be careful not to move pen or index.

(10) Set proportional band dial to 10 on limited THROTTLOR, 40 on full THROTTLOR. If necessary, readjust reset to get controlled air pressure to 7.5 psi.

(11) On limited THROTTLOR, proceed as follows:

(a) Turn proportional band dial from 10 to 2 then back to 10. If controlled air pressure changes by more than 0.2 psi as dial is turned from 10 to 2, loosen locking screw (fig. 1) and adjust movable arm. Tighten screw.

(b) Readjust reset until controlled air pressure returns to 7.5 psi.

(c) Repeat (a) and (b), reversing direction of movable arm adjustment if necessary, until controlled air pressure does not change by more than 0.2 psi.

(12) On full THROTTLOR, proceed as follows:

(a) Turn proportional band dial from 40 to 10 to 100 then back to 40. If controlled air pressure changes by more than 0.2 psi as dial is turned from 10 to 100, loosen locking screw (fig. 1) and adjust movable arm. Tighten screw.

(b) Readjust reset until controlled air pressure returns to 7.5 psi.

(c) Repeat (a) and (b), reversing direction of movable arm adjustment if necessary, until controlled air pressure does not change by more than 0.2 psi.

(13) Reconnect control link to point A, if direct-acting control is desired (see following table).

| CONTROL ACTION | CONTROL LINK CONNECTION | MEASURED VARIABLE | OUTPUT PRESSURE |
|---|---|---|---|
| DIRECT | TO POINT A | INCREASES | INCREASES |
| REVERSE | TO POINT B | INCREASES | DECREASES |

**h. STABILITY OF CONTROLLED AIR PRESSURE.** If controlled air pressure fluctuates too much for proper control of the process, proceed as follows:

(1) Check length of tubing in controlled air line. This line should be at least 35 feet long. Capacity and stability can be increased by lengthening the line, however, lengths greater than 200 feet may introduce a lag in response of the final control element.

(2) If increasing the line length does not correct the condition, recheck entire system for leaks and excessive friction in linkages. If necessary, inspect and clean the pilot relay, par. 2, d.

# PNEUMATIC CONTROL COMPONENTS (BATCH AIR-O-LINE CONTROL)

SERVICE

## 1. GENERAL

a. Causes of faulty control not due to obvious mechanical defects such as broken, damaged, or missing parts are best determined by following a systematic troubleshooting procedure such as given below. Take all steps in the order given until the faulty condition is found and corrected.

b. When an adjustment is made, allow about one minute for the system to respond before attempting to observe and analyze the effect.

c. The adjustments described will improve the operation of the automatic control system; however, the quality of control may be affected by variables such as pulsations in the flow line of an auxiliary flow controller or external vibration.

## 2. TROUBLESHOOTING PROCEDURES

**a. PRELIMINARY CHECKS** Failure to follow a periodic schedule of maintenance procedures can result in faulty operation of control components. Refer to the maintenance section for pneumatic control components and perform the steps given there. If the trouble is not eliminated, proceed as follows:

**b. EXTERNAL ACCESSORIES**

(1) Inspect pressure regulator in supply line for defects, especially the diaphragm. Make sure exhaust port on regulator and supply line are not blocked.

(2) Use a soap solution to check control system piping for leaks, especially line from pilot relay on rear wall of case in lower left-hand corner to final control element. Tighten any leaking connections. Replace any leaking tubing.

**c. CONTROLLED AIR**

(1) If control system includes a bypass panel, switch to TEST position (for operating instructions, refer to bypass panel operation section). If the bypass panel is not included, disconnect controlled air line from final control element. To control process manually, connect a manually regulated air supply to the final control element. Refer to instructions provided by manufacturer of final control element for inspection or test procedures and check element.

(2) If the instrument is a circular chart recorder, remove the chart and chart plate.

(3) Examine lever system of AIR-O-LINE unit for damaged parts, disconnected spring, etc. Make sure linkage from differential lever to flapper actuating lever is intact. Replace damaged parts.

NOTE: Before disassembling any part of the instrument or removing the instrument from service, place bypass control panel in "SERVICE" position (refer to bypass panel operation section). If the instrument does not have a bypass panel, the final control element must be operated manually while the instrument is being serviced.

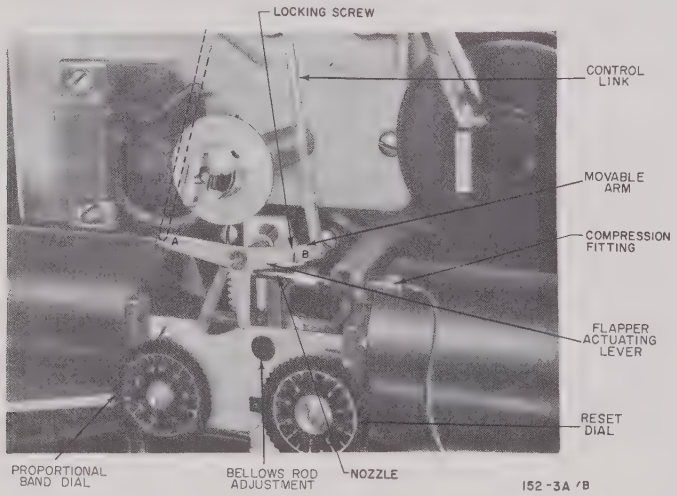


Figure 1. AIR-O-LINE Control Unit on Circular Chart Recorder

(4) Refer to figure 1. Visually check flapper alignment. To facilitate checking, remove flapper actuating lever after removing cotter. If flapper is twisted or bent, replace it. If flapper does not appear to be at right angles to nozzle, loosen compression fitting and screw nozzle in or out until flapper is square with nozzle. Hold nozzle in position and tighten compression fitting.

(5) Hold flapper away from nozzle; controlled air pressure should drop to 1 psi or less. Seal nozzle port with finger; controlled air pressure should rise to 19 psi or higher. If not, recheck nozzle connections for leakage, if nozzle was adjusted in step (4).

NOTE: A schematic view of the complete AIR-O-LINE control system is included in the pneumatic control components theory section of this manual.

(6) If fault is not corrected, check for leaks in air line from nozzle to pilot relay. Reinstall flapper actuating lever then perform pilot relay checks.



### d. PILOT RELAY CHECKS

(1) Pilot relay is located on rear wall of case in lower left-hand corner. Swing out chassis, if necessary. If air line from controlled air pressure gage connects to center of round cover plate of pilot relay, disconnect it from plate.

(2) Remove six screws, cover plate, and flapper disc assembly.

(3) Hold flapper of AIR-O-LINE unit away from nozzle. Alternately seal and open nozzle port with finger over end of nozzle of AIR-O-LINE unit, while observing exhaust nozzle in center of pilot relay. Exhaust nozzle must move smoothly in and out. If it does not move or if movement is jerky, check connections of line from nozzle to pilot relay for leaks. If correct operation cannot be obtained, replace pilot relay.

(4) Make sure neoprene face of flapper assembly is free of dirt. If neoprene is cut or grooved, inspect nozzle for rough edges or worn spots. If nozzle is not in good condition, unscrew nozzle assembly and install a replacement. Turn new nozzle assembly in as far as it will go but DO NOT tighten excessively. Replace flapper disc assembly, if neoprene is cut or grooved.

(5) Reassemble flapper disc assembly and cover plate and reconnect air line, if disconnected in step (1). If pilot relay hums or chatters as pressure builds up, remove plate and rotate flapper disc assembly about 90 degrees.

**e. ALIGNMENT CHECK.** Refer to separate service section and check alignment of differential mechanism.

**f. TEMPORARY SCALE FOR CIRCULAR CHART RECORDER.** To prevent need for frequent removal and reinstallation of chart and chart plate during subsequent checks and adjustments, proceed as follows. Cut a sector including the hub from a used chart. To stiffen sector, glue it on heavier paper. Install sector and rotate chart hub if necessary until sector is under pen tip.

**g. CONTROLLER ALIGNMENT**

(1) PROPORTIONAL BAND CHECK

(a) Make sure instrument power switch is in "ON" position. Set proportional band dial at 40.

(b) Set pen at 70% full scale.

(c) Turn reset dial fully counterclockwise (maximum reset).

(d) Adjust set point index until controlled air is stable at 9 ± 1/2 psi.

(e) Turn proportional band dial to 10, then 100. If controlled air pressure increases as dial is turned from 10 to 100, remove plug and turn bellows rod adjustment eccentric (reached with screwdriver through hole shown in fig. 1) clockwise. If controlled air pressure decreases as dial is turned, turn eccentric counterclockwise.

(f) Repeat steps (d) and (e) until controlled air pressure changes by no more than 0.3 psi as the proportional band dial is turned from 10 to 100.

(2) ALIGNMENT OF SET POINT INDEX

(a) Adjust set point index until controlled air is stable at 9 ± 1/2 psi. If the index position does not coincide with that of the pen, to within 1/4% full scale, loosen compression fitting (fig. 1). Screw nozzle away from flapper if control link is connected to point A (fig. 1) and index is upscale of pen, or if control link is connected to point B and index is downscale of pen. Screw nozzle toward flapper if control link is connected to point A and index is downscale of pen, or if control link is connected to point B and index is upscale of pen. Tighten compression fitting.

(b) Repeat procedure in step (a) above until set point index is within 1/4% full scale of pen.

(c) Connect control link to point A, if direct-acting control is desired (see following table).

| CONTROL ACTION | CONTROL LINK CONNECTION | MEASURED VARIABLE | OUTPUT PRESSURE |
|---|---|---|---|
| DIRECT | TO POINT A | INCREASES | INCREASES |
| REVERSE | TO POINT B | INCREASES | DECREASES |

**h. STABILITY OF CONTROLLED AIR PRESSURE.** If controlled air pressure fluctuates too much for proper control of process, proceed as follows:

(1) Check length of tubing in controlled air line. This line should be at least 35 feet long. Capacity and stability can be increased by lengthening the line; however, lengths greater than 200 feet may introduce a lag in the response of the final control element.

(2) If increasing the line length does not correct the condition, recheck entire system for leaks, and excessive friction in linkages. If necessary, inspect and clean the pilot relay, par. 2, d.

# PNEUMATIC CONTROL COMPONENTS (AIR-O-LINE)

SERVICE

## 1. GENERAL

a. Causes of faulty control not due to obvious mechanical defects such as broken, damaged, or missing parts are best determined by following a systematic troubleshooting procedure such as given below. Take all steps in the order given until the faulty condition is found and corrected.

b. When an adjustment is made, allow about one minute for the system to respond before attempting to observe and analyze the effect.

c. The adjustments described will improve the operation of the automatic control system; however, the quality of control may be affected by variables such as pulsations in the flow line of an auxiliary flow controller or external vibration.

## 2. TROUBLESHOOTING PROCEDURES

**a. PRELIMINARY CHECKS.** Failure to follow a periodic schedule of maintenance procedures can result in faulty operation of control components. Refer to the maintenance section for pneumatic control components and perform the steps given there. If the trouble is not eliminated, proceed as follows:

### b. EXTERNAL ACCESSORIES

(1) Inspect pressure regulator in supply line for defects, especially the diaphragm. Make sure exhaust port on regulator and supply line are not blocked.

(2) Use a soap solution to check control system piping for leaks, especially line from pilot relay (on rear wall of case in lower left-hand corner) to final control element. Tighten leaking connections, replace leaking tubing.

(3) Check linkage of air-operated controllers for excessive friction.

### c. CONTROLLED AIR

(1) If control system includes a bypass panel, switch to TEST position (for operating instructions, refer to bypass panel operation section). If the bypass panel is not included, disconnect controlled air line from final control element. To control process manually, connect a manually regulated air supply to the final control element. Refer to instructions provided by manufacturer of final control element for inspection or test procedures, and check element.

(2) If instrument is a circular chart recorder, remove the chart and chart plate.

(3) Examine lever system of AIR-O-LINE unit for damaged parts, disconnected spring, etc. Make sure linkage for differential lever to flapper actuating lever is intact. Replace damaged parts.

NOTE: Before disassembling any part of the instrument or removing the instrument from service, place bypass control panel in "SERVICE" position (refer to bypass panel operation section). If the instrument does not have a bypass panel, the final control element must be operated manually while the instrument is being serviced.

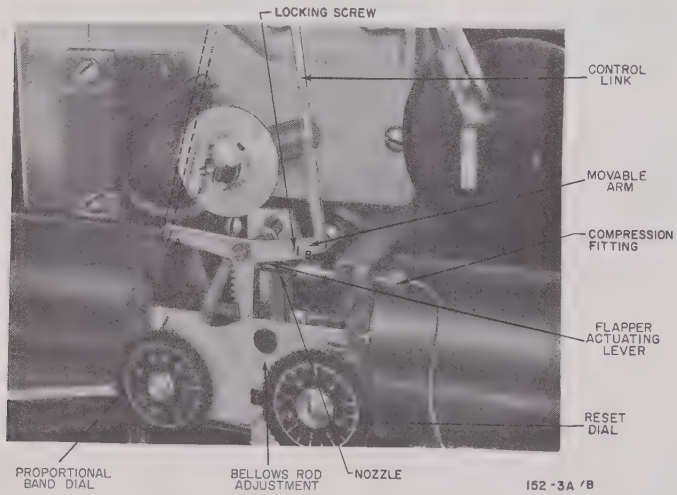


Figure 1. AIR-O-LINE Control Unit on Circular Chart Recorder

(4) Refer to figure 1 or 2. Visually check flapper alignment. To facilitate checking, remove flapper actuating lever after removing cotter. If flapper is twisted or bent, replace it. If flapper does not appear to be at right angles to nozzle, loosen compression fitting and screw nozzle in or out until flapper is square with nozzle. Hold nozzle in position and tighten compression fitting.

(5) Hold flapper away from nozzle; controlled air pressure should drop to 1 psi or less. Seal nozzle port with fingers; controlled air pressure should rise to 19 psi or higher. If not, recheck nozzle connections for leakage, if nozzle was adjusted in step (4).

NOTE: A schematic view of the complete AIR-O-LINE control system is included in the pneumatic control components theory section of this manual.

(6) If fault is not corrected, check for leaks in air line from nozzle to pilot relay. Reinstall flapper actuating lever then perform pilot relay checks.

## PNEUMATIC CONTROL COMPONENTS (AIR-O-LINE)

SERVICE

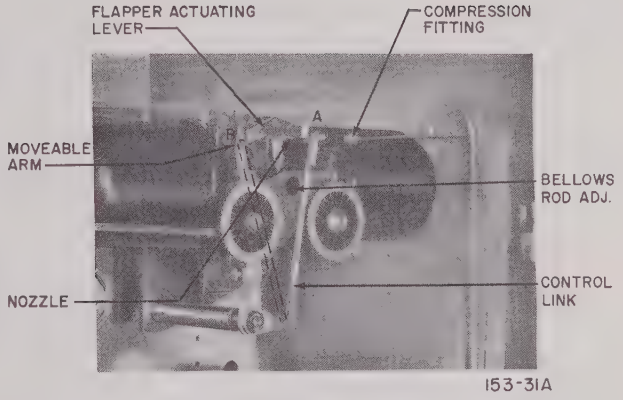


Figure 2. AIR-O-LINE Control Unit on Strip Chart Recorder

### d. PILOT RELAY CHECKS

(1) Pilot relay is located on rear wall of case in lower left-hand corner. Swing out chassis, if necessary. If air line from controlled air pressure gage connects to center of round cover plate of pilot relay, disconnect it from plate.

(2) Remove six screws, cover plate, and flapper disc assembly.

(3) Hold flapper of AIR-O-LINE unit away from nozzle. Alternately seal and open nozzle port with finger over end of nozzle of AIR-O-LINE unit, while observing exhaust nozzle in center of pilot relay. Exhaust nozzle must move smoothly in and out. If it does not move or if movement is jerky, check connections of line from nozzle to pilot relay for leaks. If correct operation cannot be obtained, replace pilot relay.

(4) Make sure neoprene face of flapper disc is free of dirt. If neoprene is cut or grooved, inspect nozzle for rough edges or worn spots. If nozzle is not in good condition, unscrew nozzle assembly and install a replacement. Turn new nozzle assembly in as far as it will go but DO NOT tighten excessively. Replace flapper disc assembly, if neoprene is cut or grooved.

(5) Reassemble flapper disc assembly and cover plate and reconnect air line, if disconnected in step (1). If pilot relay hums or chatters as pressure builds up, remove plate and rotate flapper disc assembly about 90 degrees.

**e. ALIGNMENT CHECK.** Refer to separate service section and check alignment of differential mechanism.

**f. TEMPORARY SCALE FOR CIRCULAR CHART RECORDER.** To prevent need for frequent removal and reinstallation of chart and chart plate during subsequent checks and adjustments, proceed as follows. Cut a sector including the hub from a used chart. To stiffen sector, glue it on heavier paper. Install sector and rotate chart hub until sector is under the pen tip.

**g. PROPORTIONAL BAND CHECK**

(1) Make sure control link is connected in the direct-acting position (to point A, fig. 1 or 2).

(2) Make sure instrument power switch is in "ON" position; set automatic reset dial at 10 and proportional band dial at 40.

(3) Align set point index and pen at 55 per cent of full scale.

(4) Turn proportional band dial to 10, 100 and back to 40 while watching the controlled air pressure gage.

(5) If pressure increases by more than 0.3 psi, adjust nozzle away from flapper; if pressure decreases by more than 0.3 psi, adjust nozzle toward flapper as described in par. c, (4).

(6) Repeat steps (3) and (4) until output pressure does not vary by more than 0.3 psi.

**h. RESET CHECK.** Align the pen and set point index at 55 per cent of full scale. No reset action should occur. If it does occur, proceed as follows:

(1) Set reset dial at 1.

(2) Set proportional band dial at 40.

(3) Align pen and set point index at 55 per cent full scale.

(4) If output pressure is not between 8 and 10 psi, move index up or down scale, then back to midscale.

(5) If over a six-minute period, the output pressure drifts by more than 0.3 psi, adjust as follows:

(a) If output pressure drifts to lower value, remove plug and turn eccentric screw on bellows rod clockwise. If output pressure drifts to a higher value, turn eccentric screw counterclockwise.

(b) Turn reset dial to 10.

(c) Change control link to reverse-acting position (B, figs. 1 and 2).

(d) If necessary, loosen lockscrew and manually adjust movable arm of flapper actuating lever until same output pressure is obtained as in step (a). Tighten lockscrew.

(e) Turn reset dial to 1.

(f) Watch record for six minutes. If drift occurs with control link still in reverse-acting position, continue to adjust movable arm until record is maintained for six minutes with less than 0.3 psi drift in either direction.

(g) Reconnect control link to point A, if direct-acting control is desired (see following table).

| CONTROL ACTION | CONTROL LINK CONNECTION | MEASURED VARIABLE | OUTPUT PRESSURE |
|---|---|---|---|
| DIRECT | TO POINT A | INCREASES | INCREASES |
| REVERSE | TO POINT B | INCREASES | DECREASES |

i. **STABILITY OF CONTROLLED AIR PRESSURE.** If controlled air pressure fluctuates too much for proper control of the process, proceed as follows:

(1) Check length of tubing in controlled air line. This line should be at least 35 feet long. Capacity and stability can be increased by lengthening the line; however, lengths greater than 200 feet may introduce a lag in the response of the final control element.

(2) If increasing the line length does not correct the condition recheck entire system for leaks and excessive friction in linkages. If necessary, inspect and clean the pilot relay, par. 2, d.

## ELECTRIC PROPORTIONING CONTROL MECHANISM — SERVICE

### 1. TROUBLESHOOTING.

The following procedures apply to electric proportioning control components within the instrument case. Generally, causes of faulty operation due to these components can be detected visually.

WARNING: Deenergize control circuit to avoid shock hazard.

**a.** Swing chassis out of case and inspect control assembly for bent, broken, or missing parts. Refer to parts list section and replace defective parts.

**b.** Refer to electric proportioning control maintenance section and clean contactor and resistor. Check contact pressure.

**c.** Check components electrically, as follows:

(1) Disconnect external connections and connect ohmmeter across output terminals. Make sure leads from control assembly are properly connected to terminal board.

(2) Observe ohmmeter and move pen through proportional band by manually turning drive gear; meter indication should increase and decrease smoothly. If not, refer to electric proportioning control maintenance section and install a new resistor.

(3) Disconnect ohmmeter and restore external connections.

### 2. PROPORTIONAL BAND CHANGE.

The proportional band is determined by the resistor used. To change the proportional band, refer to the following table and obtain the required resistor by part number. Refer to the electric proportioning control maintenance section for information on removal and installation of resistor.

TABLE 1

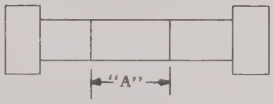


| Proportional Band Resistor Part No. | Nominal Resistance | "A" Length | % Prop. Band of Circular Chart Instrument | % Prop. Band of Circular Scale and Strip Chart Instrument | Color Code Markings |
|---|---|---|---|---|---|
| 352030-1 | 135 ohms | .154 | 2.5% | | Brown |
| 352030-2 | 135 ohms | .308 | 5% | 2.5% | Red |
| 352030-3 | 135 ohms | .617 | 10% | 5% | Orange |
| 352030-4 | 135 ohms | 1.234 | 20% | 10% | Yellow |
| 352030-5 | 135 ohms | 2.010 | | 20% | Green |
| 352030-6 | 1000 ohms | 1.234 | 20% | | Blue |
| 352030-7 | 1000 ohms | 2.010 | | 20% | Violet |

## CONTACT CONTROL COMPONENTS — SERVICE

### 1. TROUBLESHOOTING

**a. GENERAL** Troubleshooting consists of checking visually for obvious defects, and an electrical check, if necessary.

**b. VISUAL CHECKS**

(1) MAKE SURE INSTRUMENT IS LEVEL. Check latch adjustment as described in instrument installation section.

(2) Inspect switch mechanism (fig. 1) for disconnected, broken or missing parts.

(3) Inspect switches and mounting strip for damage. Make sure glass tubes are not cracked or broken.

(4) If a switch has been rotated in its clip, it may fail to make contact. Make sure switches are properly positioned (with the "UP" label upward) and securely cemented in their clips.

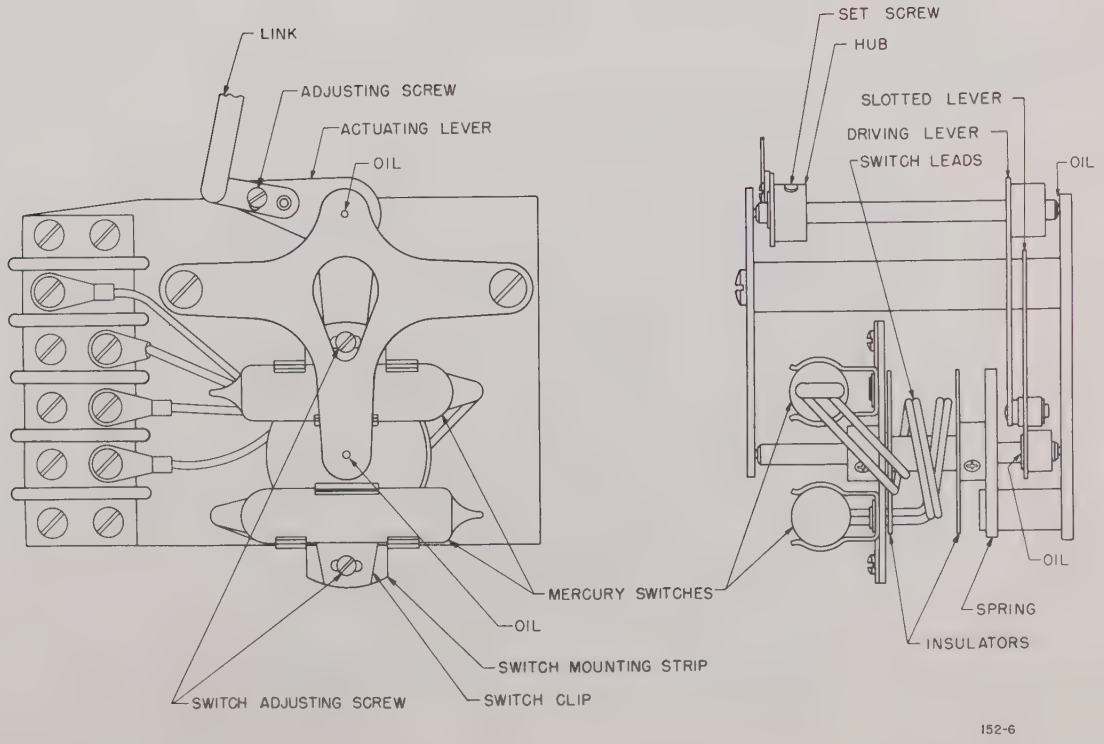


Figure 1. Contact Control Unit

662-0016-152

(5) Check switch leads. They should not be wedged against the switch clips nor restrict motion of switches at any point. Moreover, leads must be dressed to prevent wear through of insulation and grounding out on metal parts.

### c. ELECTRICAL CHECKS

WARNING: To avoid shock hazard, switch off instrument power and deenergize the control circuits.

(1) Inspect for loose or broken connections at terminal block.

(2) Refer to wiring diagrams included in this manual and connect an ohmmeter to each set of terminals in turn. Check for proper switching action by rotating the drive gear (fig. 2) to move pen past set point index. Also observe the mechanism for proper mechanical action. Replace defective parts and refer to par. 2, below.

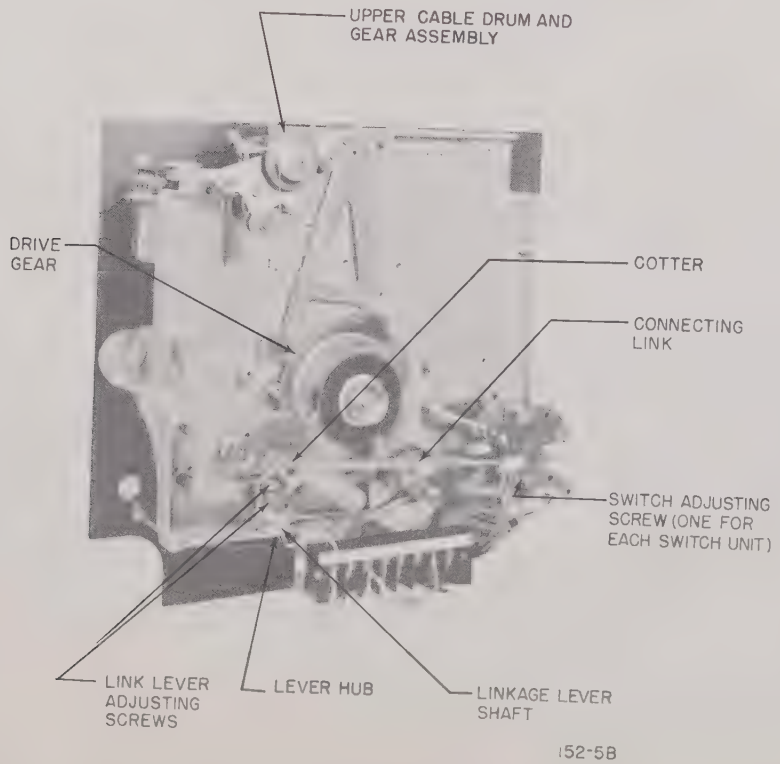


Figure 2. Rear View of Circular Chart Recorder Chassis Showing Dual Switch Mechanism

## 2. OPERATIONAL CHECKS AND ADJUSTMENTS FOR FRONT-OF-CHASSIS SWITCHES

**a. GENERAL** Proper switching action at the control point depends on correct alignment of operating points in relation to the set point index and on correct setting of the neutral zone.

**b. PRELIMINARY PROCEDURES** To facilitate switch adjustment, cut a sector and hub from a used chart. Stiffen sector by gluing it on heavy paper. Remove chart and chart plate and install chart sector; turn chart hub until sector is under pen tip.

**c. PROCEDURES** All procedures required to obtain desired switching action are listed below. Perform the checks and adjustments in the order listed.

(1) ALIGNMENT OF PEN AND SET POINT INDEX

(a) Remove connecting link between differential lever and actuating lever (fig. 1) on switch mechanism.

(b) Set pen at 55 per cent of full scale.

(c) Move set point index to 55 per cent of full scale.

(d) With pen and set point index at this point, they are correctly aligned when a 0.040-inch diameter pin can be inserted through holes in index center and differential lever (fig. 3).

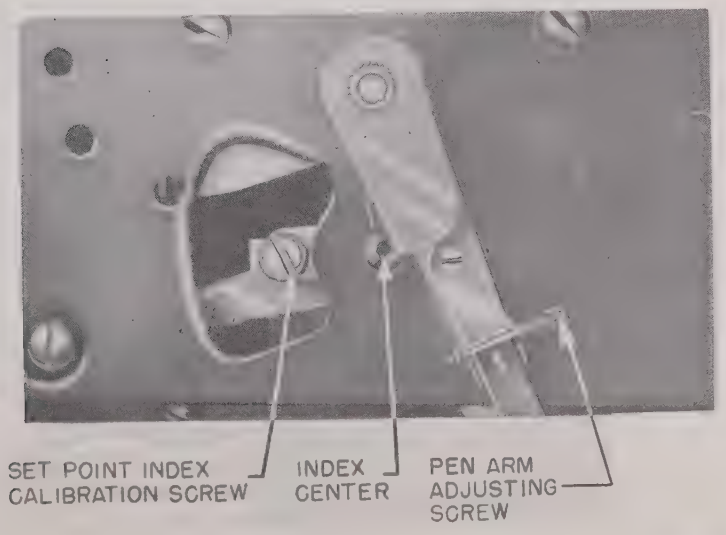


Figure 3. Set Point Index Calibration Screw

(e) If pen and index are not correctly aligned, proceed as follows:

1. Move set point index knob until pin can be inserted through holes in index center and differential lever.

2. Adjust set point index by means of set point calibration screw (fig. 3) until pen and set point index coincide at 55 per cent of full scale.

(f) If adjustment provided by the set point index calibration screw is not sufficient, proceed as follows:

1. Move set point index calibration screw to the middle of its travel.

2. Move set point index to 55 per cent of full scale.

3. Loosen set screws in hub of pen shaft differential arm (fig. 4A), and move differential lever until the 0.040-inch diameter pin can be inserted through holes in index center and differential lever.

4. Tighten set screws, connect linkage and remove gage pin.

(2) ALIGNMENT OF SWITCH MECHANISM AND SET POINT INDEX

(a) Move set point index and pen to 55 per cent of full scale.

(b) When link is connected between differential lever and actuating lever on mechanism, the switch mechanism and set point index are correctly aligned if each of following parts (fig. 1) is vertical:

1. Switch mounting strip

2. Driving lever

3. Slotted lever

(c) If switch mechanism and set point index are not correctly aligned, proceed as follows:

1. With set point index and pen at 55 per cent of full scale and link in place between differential lever and actuating lever on switch mechanism, loosen adjusting screw in actuating lever (fig. 1).

## CONTACT CONTROL COMPONENTS

## SERVICE

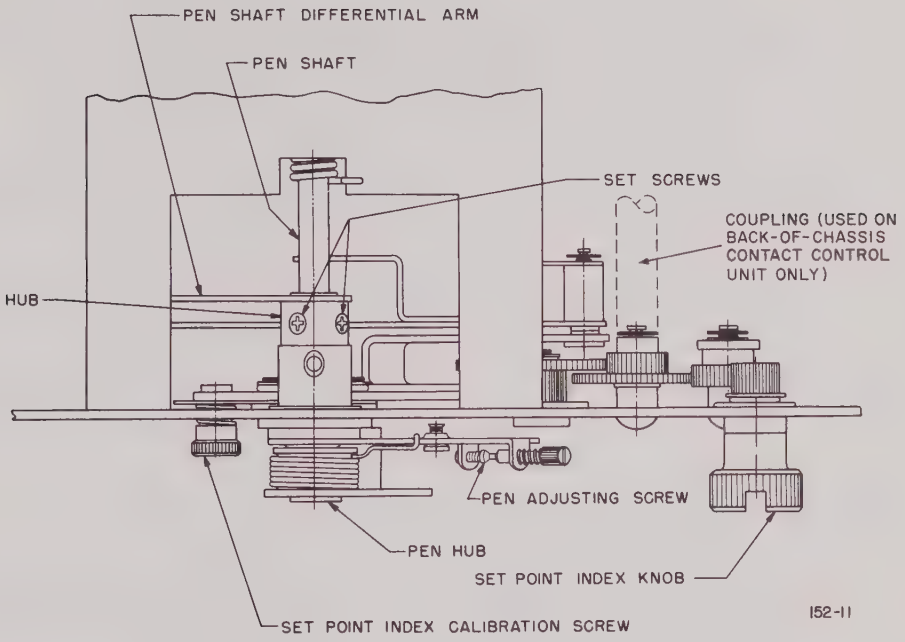


A. Top View of Set Point Index Mechanism and Pen Shaft for Front-of-Chassis Contact Control Unit

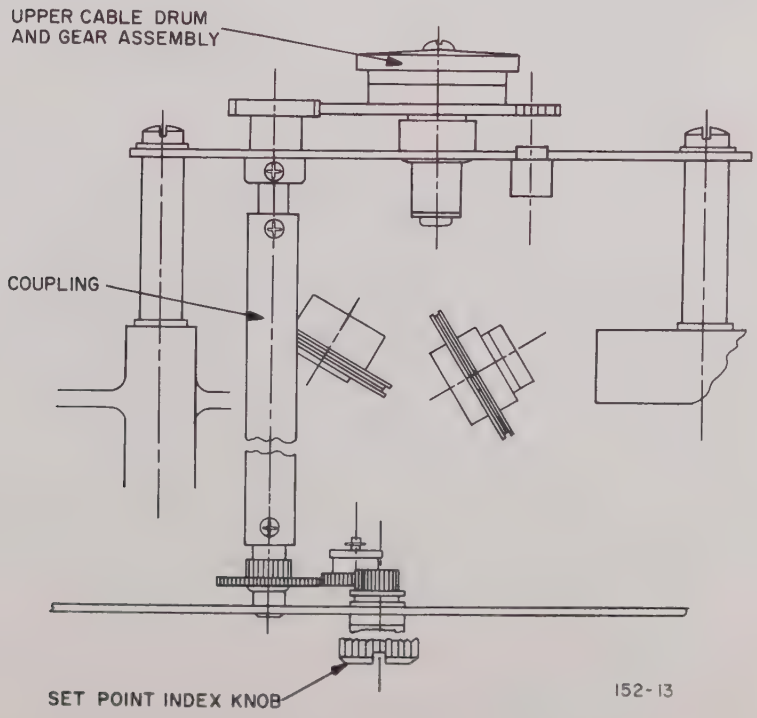


B. Top View of Coupling for Rear-of-Chassis Contact Control Unit

Figure 4. Set Point Index Mechanism used on Circular Chart Recorders

2. Move switch mounting strip, driving lever, and slotted lever so that they are vertical.

3. Tighten adjusting screw in actuating lever.

(d) If adjustment provided by adjusting screw in actuating lever is not sufficient, proceed as follows:

1. Fix adjusting screw at approximately the middle of its travel.

2. Loosen set screws in hub of actuating lever.

3. Hold switch mounting strip, driving lever, and slotted lever all in vertical position.

4. Tighten set screws in actuating lever hub.

NOTE: Make certain that actuating lever is positioned on its shaft so that connecting link between differential lever and actuating lever is in same vertical plane as actuating lever.

(e) Make any slight readjustments required by means of adjusting screw in actuating lever, as directed in par. (c) above.

(3) SWITCH ALIGNMENT

(a) Align pen (move pen manually by turning drive gear) and set point index at 55 per cent of full scale.

(b) Loosen adjusting screw (fig. 1) and change position of switch to obtain desired action. Switch plate has two tapped holes at each clip; if sufficient adjustment cannot be obtained with screw in first hole, move screw to second hole.

(c) Refer to separate contact control components operation section and adjust width of neutral or other zone.

(d) Check adjustments by first realigning pen and index then by moving either the pen or index while observing switching action. If desired switching action has not been obtained, readjust as described above.

(4) ALIGNMENT OF SET POINT INDEX AT CONTROL POINT. Adjustment under par. 2,c,(4) above is a coarse adjustment; a finer adjustment, if required, can be made as follows:

(a) Put control system in operation. Move set point index to desired value and permit instrument to line out at control point.

(b) If control point does not coincide with set point index, turn calibration screw (fig. 3) until index is aligned with control point.

## 3. OPERATIONAL CHECKS AND ADJUSTMENTS FOR BACK-OF-CHASSIS SWITCHES

**a. GENERAL.** Proper switching action at the control point depends on correct alignment of operating points in relation to the set point index and on correct setting of the neutral zone.

**b. PROCEDURES** All procedures required to obtain desired switching action are listed below. Perform the checks and adjustments in the order listed.

(1) ALIGNMENT OF PEN AND SET POINT INDEX

CAUTION: With the pen set at zero or 100 per cent of scale, check to see that gear sector has approximately five teeth overtravel. If not, disengage ring pinion and rotate gear sector until five teeth are left as overtravel. Re-engage ring pinion and reinstall locking nut.

(a) Remove cotter(s) (fig. 2) and disconnect connecting link(s) from link lever(s).

(b) Loosen setscrews in hub of lever assembly.

(c) Align pen and set point index at 50 per cent of full scale. Loosen link lever adjusting screw(s) (fig. 2) and place lever(s) with linkage holes aligned, if dual mechanism, at the center of adjustment. Tighten screws.

(d) Rotate lever assembly until a 5/64-inch (.078-inch) diameter aligning pin can be inserted in linkage hole(s) of lever(s) and bushing in mounting plate.

(e) Tighten setscrews.

(f) If tightening of setscrews has disturbed alignment slightly, loosen rear setscrews of coupling (fig. 4B). Rotate upper cable drum and gear assembly (fig. 2) until aligning holes are perfectly in line.

(g) Tighten setscrews in coupling.

(h) Check movement of index. It should be adjustable from slightly below zero to 95 - 98 per cent of scale.

(i) Re-engage mercury switch connecting link and replace cotter.

(2) ALIGNMENT OF SWITCH MECHANISM AND SET POINT INDEX

(a) Set pen and index at 50 per cent of full scale.

(b) Check alignment of slotted lever and mercury switch mounting plate (fig. 5). Lever is correctly aligned if it is vertical with mercury switch mounting plate.

(c) If switch mechanism and set point index are not correctly aligned, proceed as follows:

1. Loosen mounting screws.

2. Shift mercury switch unit either to right or left in order to obtain vertical position.

3. Tighten mounting screws.

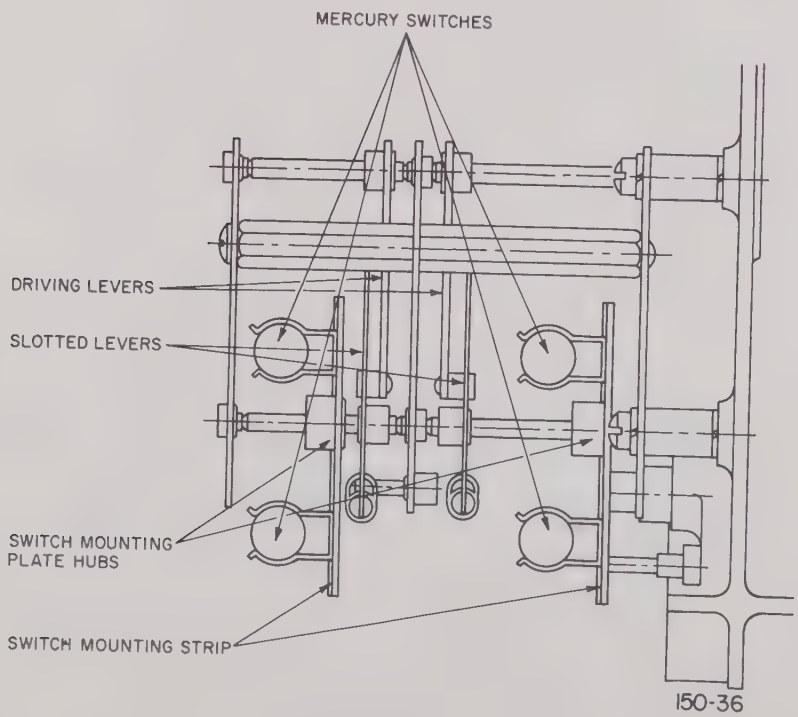


Figure 5. Mercury Switch Control Unit, side view

(3) SWITCH ALIGNMENT

(a) Align pen (move pen manually by turning drive gear) and set point index at 55 per cent of full scale.

(b) Loosen adjusting screws (fig. 2) and change position of switch to obtain desired action. Switch plate has two tapped holes at each clip; if sufficient adjustment cannot be obtained with screw in first hole, move screw to second hole.

(c) Refer to separate contact control components operation section and adjust width of neutral or other zone.

(d) Check adjustments by first realigning pen and index then by moving either the pen or index while observing switching action. If desired switching action has not been obtained, readjust as described above.

(4) ALIGNMENT OF SET POINT INDEX AT CONTROL POINT. Alignment under par. 3,b,(3) is made with the chassis swung out of the case and possibly inclined slightly from the normal (in case) operating position, which is presumed to be level. The angle will probably be large enough to disturb switch alignment in operation. To compensate proceed as follows:

(a) Put control system in operation. Move the set point index to desired value and permit instrument to line out at the control point.

(b) If control point does not coincide with set point index, turn calibration screw (fig. 3) until index is aligned with control point.

## CONTACT CONTROL COMPONENTS — SERVICE

### 1. TROUBLESHOOTING

**a. GENERAL.** Troubleshooting consists of checking visually for obvious defects, and an electrical check, if necessary.

**b. VISUAL CHECKS**

(1) MAKE SURE INSTRUMENT IS LEVEL. Check chassis latch adjustment as described in instrument installation section.

(2) Inspect control switch mechanism (fig. 1) for damage. Make sure the glass tubes are not cracked or broken.

(3) If a switch has been rotated in its clip, it may fail to make contact. Make sure switches are properly positioned (with "UP" label upward) and securely cemented in their clips.

(4) Check switch leads. They should not be wedged against the switch clips nor restrict motion of switches at any point. Moreover, leads must be dressed to prevent wear through of insulation and grounding out on metal parts.

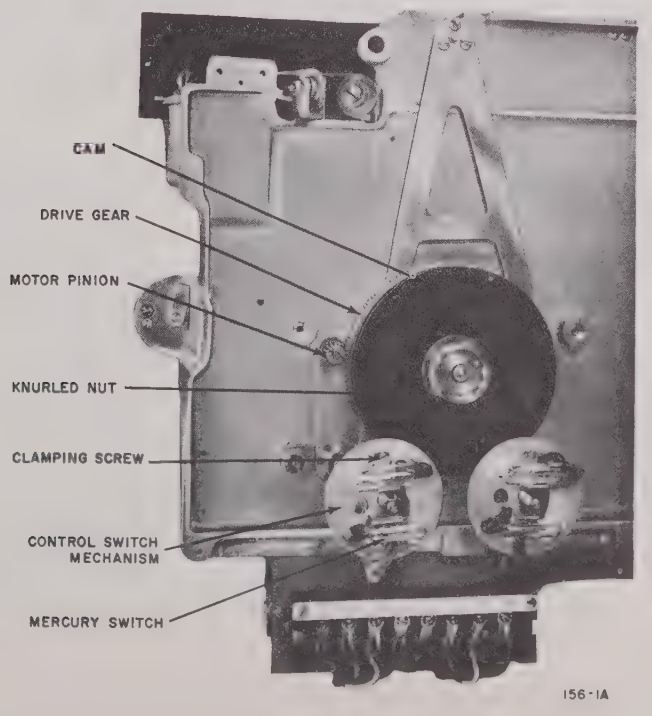


Figure 1. Rear View of Chassis showing control switches

662-0017-156

### c. ELECTRICAL CHECKS

WARNING: To avoid shock hazard, switch off instrument power and deenergize control circuits.

(1) Inspect for loose or broken connections at terminal block.

(2) Refer to the wiring diagrams included in this manual and connect an ohmmeter to each set of terminals in turn. Check for proper switching action by rotating the drive gear (fig. 1) to move the scale and set point index past the fixed index. Also observe the mechanism for proper mechanical action. Replace defective parts and refer to par. 2 below.

## 2. OPERATIONAL CHECK AND ADJUSTMENTS

**a. GENERAL.** Proper switching action at the control point depends on correct alignment of operating points in relation to set point index and on correct setting of neutral zone.

### b. PRELIMINARY PROCEDURES

(1) Unlatch chassis and swing it forward.

(2) Opening and closing of switches can be determined by observing switch directly or by connecting an electrical checking device such as an ohmmeter to the proper terminals.

**c. PROCEDURES.** All procedures required to obtain desired switching action are listed below. Perform the checks and adjustments in the order listed.

(1) SWITCH ALIGNMENT

(a) Determine by trial the total amount of movement of set point index that can be obtained with the micrometer adjustment (fig. 2). Set the adjustment at the center of its travel.

(b) Align set point index and scale with fixed index at 50 per cent of full scale.

(c) Loosen the clamping screw (fig. 1) and change the position of the switch to obtain the desired action. Switch plate has two tapped holes at each clip; if sufficient adjustment cannot be obtained with screw in first hole, move screw to second hole.

(d) Refer to separate contact control operation section for width adjustment of neutral or other zone.

(e) Check adjustments by moving either the scale or the index while observing switching action. If desired switching action has not been obtained, readjust as described above.

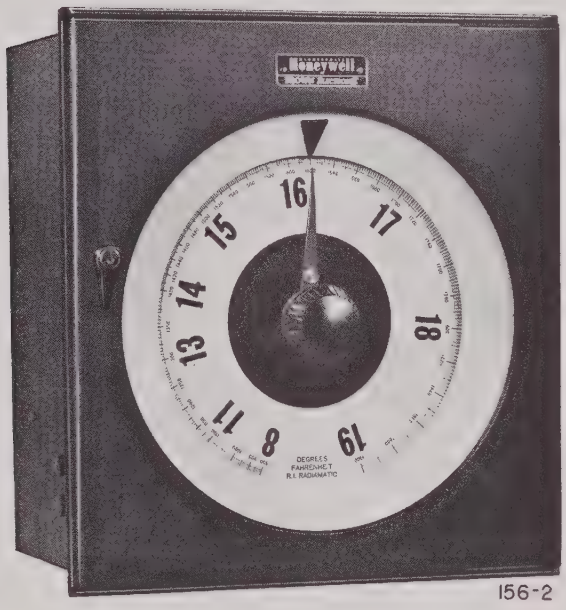


Figure 2. Circular Scale Indicating Controller

(2) ALIGNMENT OF SET POINT INDEX AT CONTROL POINT. Alignment under 2,c,(1) is made with chassis swung out of case and possibly inclined slightly from the normal (in case) operating position, which is presumed to be level. The angle will probably be large enough to disturb switch alignment, in operation. To compensate, proceed as follows:

(a) Put control system in operation. Move set point index to desired value and permit instrument to line out at control point.

(b) If control point does not coincide with desired value, align set point index with fixed index by turning micrometer adjustment screw on index pointer (fig. 2).

## CONTACT CONTROL COMPONENTS — SERVICE

### 1. TROUBLESHOOTING

**a. GENERAL.** Troubleshooting consists of checking visually for obvious defects, and an electrical check, if necessary.

**b. VISUAL CHECKS.**

(1) MAKE SURE INSTRUMENT IS LEVEL. Check chassis latch adjustment as described in instrument installation section.

(2) Inspect switch mechanism (fig. 1) for disconnected, broken or missing parts.

(3) Inspect switches and mounting strip for damage. Make sure the glass tubes are not cracked or broken.

(4) If a switch has been rotated in its clip, it may fail to make contact. Make sure switches are properly positioned (with the "UP" label upward) and securely cemented in their clips.

(5) Check switch leads. They should not be wedged against the switch clips nor restrict motion of switches at any point.

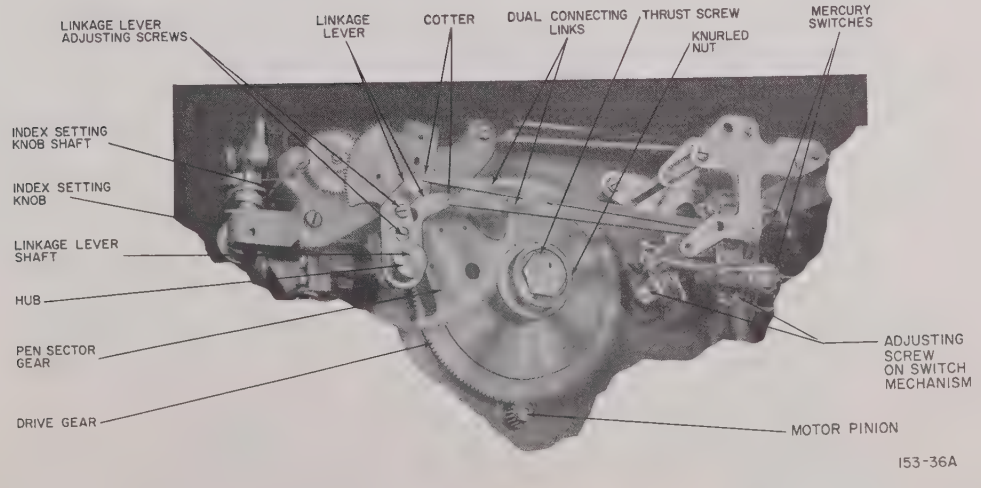


Figure 1. Rear view of Strip Chart Chassis showing Dual Contact Control Mechanism

662-0018-153

**c. ELECTRICAL CHECKS**

WARNING: To avoid shock hazard, switch off instrument power and deenergize the control circuits.

(1) Inspect for loose or broken connections at the terminal block.

(2) Refer to the wiring diagrams included in this manual and connect an ohmmeter to each set of terminals in turn. Check for proper switching action by rotating the drive gear (fig. 1) to move pen past set point index. Also observe the mechanism for proper mechanical action. Replace defective parts and refer to para. 2 below.

## 2. OPERATIONAL CHECK AND ADJUSTMENTS

**a. GENERAL** Proper switching action at the control point depends on correct alignment of operating points in relation to the set point index and on correct setting of the neutral zone.

**b. PROCEDURES.** All procedures required to obtain desired switching action are listed below. Perform the checks and adjustments in the order listed.

(1) ALIGNMENT OF SET POINT INDEX TRAVEL

(a) Check for correct travel by turning index knob clockwise to stop, then counterclockwise to stop.

(b) When index travel is correct, set point index is at approximately 98 per cent of full scale in full clockwise position of knob and at approximately 2 per cent below bottom of scale at full counterclockwise limit.

(c) If upper limit of set point index travel is not 98 per cent of full scale, proceed as follows:

1. Turn index setting knob clockwise against stop.

2. Loosen clamping screw in index cable clamp.

3. Move index along cable until it stands at approximately 98 per cent of full scale.

4. Tighten clamping screw in index cable clamp.

(2) ALIGNMENT OF SET POINT INDEX AND DIFFERENTIAL MECHANISM

(a) Align set point index and pen and pointer at 50 per cent of full scale.

(b) Refer to fig. 1. Disconnect connecting link(s) from linkage lever(s). On dual mechanism single-index controllers, loosen upper or lower linkage lever adjusting screw and align by sight the link holes in the levers. If necessary, loosen both linkage lever adjusting screws. Tighten screws after alignment is achieved.

(c) Set point index and differential mechanism are correctly aligned when a No. 47 drill or a 0.078-inch pin can be inserted through link hole(s) in linkage lever(s) and hole in bearing hub.

(3) ALIGNMENT OF SWITCH MECHANISM AND LINK LEVERS

(a) Align set point index and pen and pointer at 50 per cent of full scale.

(b) Switch mechanism and link lever(s) are correctly aligned when the following three parts of the switch mechanism (of each mechanism on dual mechanism) are vertical. These parts are shown in figure 2.

1. Switch mounting plate(s)

2. Driving lever(s)

3. Slotted lever(s)

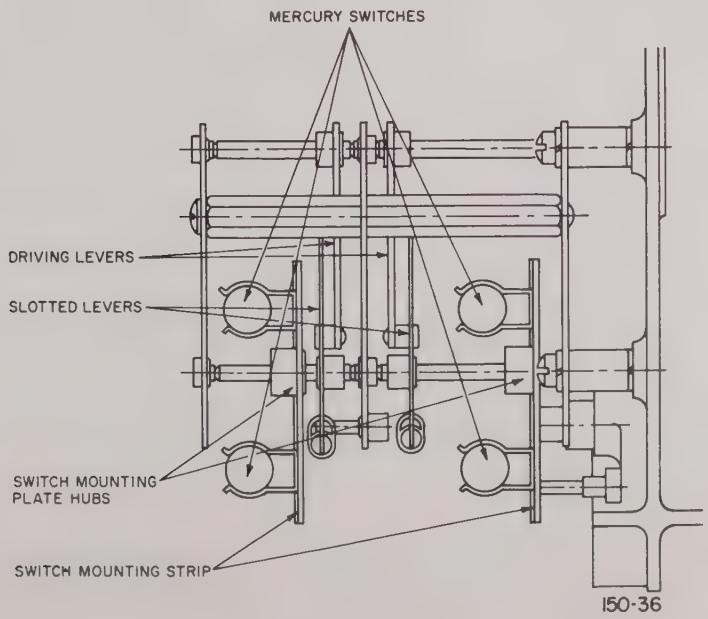


Figure 2. Side view of Mercury Switch, Control Unit

(c) If switch mechanism(s) and link lever(s) are not correctly aligned, first make sure the connecting link is in the upper hole of driving lever on single mechanism or that links are in lower holes of driving levers on dual mechanism.

(d) Loosen switch mechanism mounting screws and move mechanism right or left to bring driving lever(s) and slotted lever(s) vertical.

(e) Tighten mounting screws.

(f) Loosen setscrews in hub on switch mounting plate (fig. 2) and align the mounting plate with driving lever and slotted lever.

(h) Tighten setscrews in hub of switch mounting plate.

NOTE: These alignments on dual switch mechanism are designed to permit full use of adjustment provided by adjustable link levers for obtaining desired switching action.

(4) SWITCH ALIGNMENT (SINGLE MECHANISM)

(a) Align pen (move pen manually by turning drive gear) and set point index at 50 per cent of full scale.

(b) Loosen adjusting screw (fig. 1) and change position of switch to obtain desired switching action. Switch plate has two tapped holes at each clip; if sufficient adjustment cannot be obtained with screw in first hole, move screw to second hole.

(c) Refer to separate contact control operation section and adjust width of neutral or other zone.

(d) Check adjustments by first realigning pen and index then by moving either the pen or index while observing switching action. If desired switching action has not been obtained, readjust as described above.

(5) SWITCH ALIGNMENT (DUAL MECHANISM)

(a) Refer to fig. 1.

(b) Loosen lower adjusting screw and move inner linkage lever to desired operating point for corresponding switch assembly. Tighten lower adjusting screw.

(c) Loosen upper adjusting screw and move outer linkage lever to desired operating point for corresponding switch assembly. Tighten adjusting screw.

NOTE: With both adjusting screws loosened, both linkage levers can be rotated simultaneously, within the limits of their slots.

(6) ALIGNMENT OF SET POINT INDEX AT CONTROL POINT. Alignment under par. 2,b, (4) or par. 2,b, (5) is made with the chassis swung out of the case and possibly inclined slightly from the normal (in case) operating position, which is presumed to be level. The angle will probably be large enough to disturb switch alignment, in operation. To compensate, proceed as follows:

(a) Put control system in operation. Move set point index to desired value and permit instrument to line out at the control point.

(b) If control point does not coincide with the desired value, loosen clamping screw and move index to coincide with the control point. Tighten clamping screw.

NOTE: If it is necessary to move the index more than 5 per cent of full scale, first check adjustment of control mechanism as directed under par. 2,b, (4) or 2.b,(5) and readjust, if necessary.

**THREE-MODE CONTROL UNIT** **SERVICE**
**ELECTR-O-LINE**

## 1. LOCALIZING TROUBLE

a. A thorough knowledge of the principles of controller operation provides the best means for localizing trouble. Troubleshooting should be carried out systematically, taking full advantage of the attached component layout and schematic diagrams.

b. The key to quick efficient troubleshooting is the substitution method. This method consists of replacing either the power supply board, amplifier board, and/or output board with a spare. If the substitution method restores operation, the faulty component has been isolated to a particular board and can be located by tube substitution, signal tracing, voltage measurements, and resistance checks. If the substitution method fails, the trouble is either in the power transformer assembly, connections, or in components mounted on the front panel of the chassis.

## 2. TROUBLESHOOTING TECHNIQUES

After the trouble has been isolated to a particular board or assembly, proceed as follows:

### a. POWER SUPPLY BOARD

(1) Visually inspect the board for obvious troubles.

(2) If no indication of trouble is found, energize the controller.

(3) Observe that tube V101 has an internal glow. Allow a 5-minute warm-up period.

(4) Measure the power supply input and output voltages as given in the attached schematic diagram.

(5) If a voltage is missing, or exceeds ±10 per cent of the schematic value, remove power and check the individual components in the associated circuit.

WARNING: Before checking components on the power supply board, discharge the filter capacitors.

### b. VOLTAGE AMPLIFIER AND OUTPUT BOARDS

(1) Visually inspect the defective board for obvious troubles.

(2) Check the tubes.

(3) If no trouble is found, replace the tubes and energize the controller.

(4) Measure the a-c and d-c operating voltages for each tube. All readings should be within ±10 per cent of the value given in the schematic diagram.

(5) If a reading is incorrect, remove power and check the individual components in the associated circuit.

**c. CONVERTER CHECKOUT.** A buzzing sound from the converter indicates operation. If no sound is heard, remove power and proceed as follows:

(1) Check the converter socket and side fed connector for loose or broken connections.

(2) If the connections are in order, remove side fed connector, apply power and measure the voltage across connector socket for a reading of 6.0 vac. The converter is defective if it remains inoperative with this voltage present.

**d. TRANSFORMER ASSEMBLY**

(1) Check the assembly for loose wire ends between terminals, broken wires or terminals, etc.

(2) Check the fuse for continuity.

(3) If there are no apparent defects, apply power and check the transformer primary and secondary voltages (see schematic diagram).

(4) To check diodes mounted on the assembly, deenergize the controller and remove the diode.

(5) Connect an ohmmeter across the diode. With the ohmmeter leads in one position, the reading should be from 1 to 10 ohms (forward resistance). With the leads reversed, the reading should be from 5K to 500K ohms (back resistance).

**e. FRONT PANEL ASSEMBLY.** If a trouble has been isolated to the front panel assembly, remove power and check as follows:

(1) Inspect the panel for obvious troubles.

(2) Using an ohmmeter, check the open and closed positions of each switch.

(3) Before checking potentiometers mounted on the panel, remove the voltage amplifier board to eliminate external resistances. (See the schematic diagram for potentiometer values.)

## 3. PERFORMANCE CHECKS

**a. EQUIPMENT REQUIRED.** When a faulty component has been replaced in a critical area, make performance checks before placing the unit in operation. Table 1 specifies the equipment required.

TABLE 1

| ITEM | USED TO |
|---|---|
| Interconnecting cable assembly Brown Part No. 363950-1 | Make all external connections to the unit |
| (2) 400 ohm 1% and (2) 100 ohm 1% resistors with 3 pt. rotary switch | Simulate proportional resistor with ±10 step deviations |
| 120 vac, 60 cycle power source | Energize the unit |

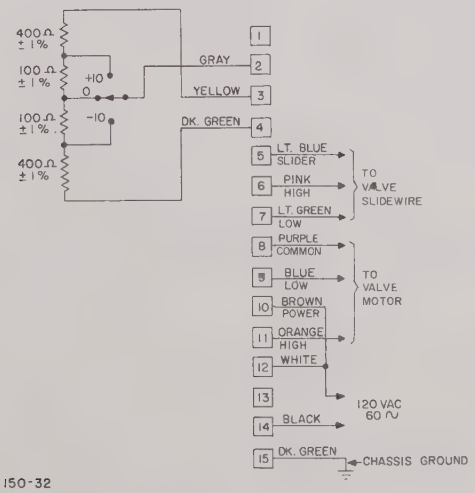


Figure 1. Connections to 15-Wire Test Cable

**b. TEST SETUP**

(1) Wire the interconnecting cable assembly as shown in figure 1, with the test switch in the "0" position.

WARNING: To avoid shock hazard, disconnect line power to instrument before removing or replacing plug PL1.

(2) Remove the plug-in cable from PL1 (see component layout diagram), and insert the interconnecting test cable. Be sure

that the word "FRONT" stencilled on the cable connector faces the front of the controller. If the unit does not perform each step as outlined below, refer to the schematic diagram and correct the trouble before proceeding with test.

c. **MANUAL CONTROL.** Apply a-c power and proceed as follows:

(1) Make initial settings:

| | |
|---|---|
| AUTO-MAN | MAN |
| MANUAL | 5 |
| SENSITIVITY | 0 |
| ON-OFF | ON |

(2) Observe that the PWR ON lamp is lighted. Allow for a 5-minute warm-up period.

(3) Observe that tube V101 (see component layout diagram) has an internal glow.

(4) Adjust the SENSITIVITY control until the OPEN and CLOSE lamps start oscillating, then back off the control until the oscillation just stops.

(5) Observe that the controller output meter reads 5.0 ±0.5. If not, adjust R14 (see component layout diagram) to obtain the correct meter reading.

(6) Set the MANUAL control to the "2" position. The CLOSE lamp should light, and the output meter should read 2.0 ±0.5.

(7) Set the MANUAL control to the "8" position. The OPEN lamp should light, and the output meter should read 8.0 ±0.5.

(8) Depress and hold the PROP. BAND ADJUST. button and vary the MANUAL control setting. Note that the output meter reading does not change.

d. **PROPORTIONAL BAND**

(1) Make initial settings:

| | |
|---|---|
| PROPORTIONAL BAND | 20 |
| RESET | 0 |
| RATE | 0 |
| MANUAL | 5 |
| AUTO-MAN | MAN |
| SENSITIVITY | Step c.(4) |

(2) Place the test switch in the "O" position.

(3) Observe that the output meter reads 5.0 ±0.5.

(4) Place the AUTO-MAN. switch in the "AUTO " position. The output meter should read the same as in step (3)

(5) Place the test switch in the +10 position. The output meter reading should increase by 1.0 ±0.3.

(6) Place the test switch in the -10 position. The output meter should read 1.0 ±0.3 below the reading of step (3).

(7) Return the test switch to the "O" position.

**e. RESET**

(1) Make the same settings as in paragraph d.(1) except set RESET to the "1" position.

(2) Observe that the output meter reads 5.0 ±0.5.

(3) Place the AUTO-MAN switch in the "AUTO " position. Observe that the output meter reads the same as in step (2).

(4) Place the test switch in the +10 position. The output meter reading should instantaneously increase 1.0 ±0.3 and then gradually continue increasing at the rate of one major scale graduation of the meter per minute.

(5) Place the test switch in the -10 position. The output meter should instantaneously decrease by 1.0 ±0.3 and then gradually continue decreasing at the rate of one major scale graduation of the meter per minute.

(6) Return the test switch to the "O" position.

**f. RATE**

(1) Make the same settings as in paragraph d.(1) except set RATE to the "2" position.

(2) Adjust the MANUAL control until the output meter reads 5.0 ±0.5.

(3) Place the AUTO-MAN switch in the "AUTO " position. Note the output meter reading.

(4) Place the test switch in the +10 position. The output meter should instantaneously read maximum and then gradually decrease in reading. At the end of 2-1/2 minutes, the meter should read 1.0 ±0.3 greater than the reading noted in step (3).

(5) Place the test switch in the -10 position. The output meter should instantaneously read minimum and then gradually increase in reading. At the end of 2-1/2 minutes, the meter should read 1.0 ±0.3 below the reading noted in step (3).

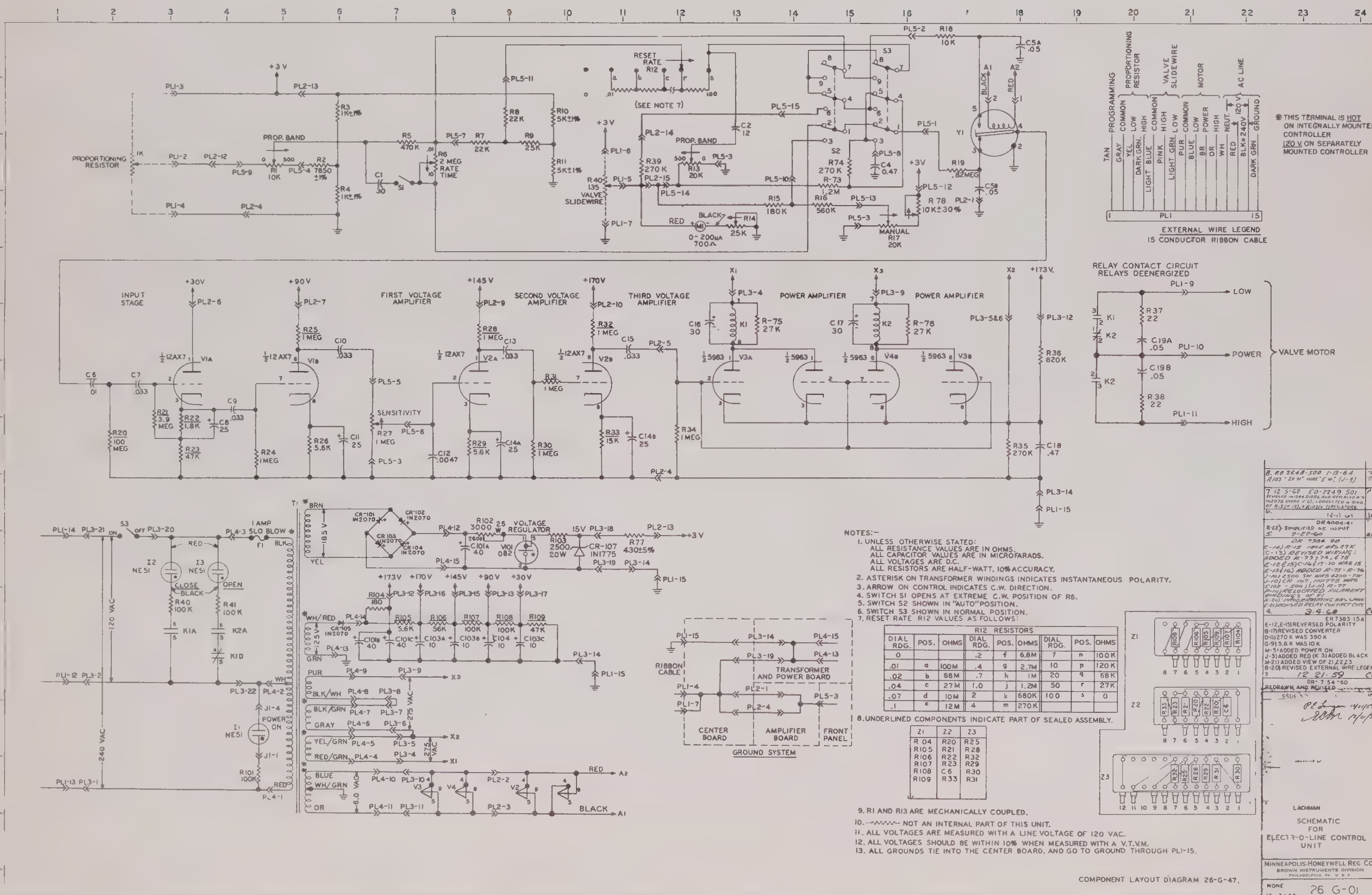


NOTES:—

1. UNLESS OTHERWISE STATED:
   ALL RESISTANCE VALUES ARE IN OHMS.
   ALL CAPACITOR VALUES ARE IN MICROFARADS.
   ALL VOLTAGES ARE D.C.
   ALL RESISTORS ARE HALF-WATT, 10% ACCURACY.
2. ASTERISK ON TRANSFORMER WINDINGS INDICATES INSTANTANEOUS POLARITY.
3. ARROW ON CONTROL INDICATES C.W. DIRECTION.
4. SWITCH S1 OPENS AT EXTREME C.W. POSITION OF R6.
5. SWITCH S2 SHOWN IN "AUTO" POSITION.
6. SWITCH S3 SHOWN IN NORMAL POSITION.
7. RESET RATE R12 VALUES AS FOLLOWS:

| R12 RESISTORS | | | | | | | | |
|---|---|---|---|---|---|---|---|---|
| DIAL RDG. | POS. | OHMS | DIAL RDG. | POS. | OHMS | DIAL RDG. | POS. | OHMS |
| 0 | | | .2 | f | 6.8M | 7 | n | 100K |
| .01 | a | 100M | .4 | g | 2.7M | 10 | p | 120K |
| .02 | b | 68M | .7 | h | 1M | 20 | q | 68K |
| .04 | c | 27M | 1.0 | j | 1.2M | 50 | r | 27K |
| .07 | d | 10M | 2 | k | 680K | 100 | s | 0 |
| .1 | e | 12M | 4 | m | 270K | | | |

8. UNDERLINED COMPONENTS INDICATE PART OF SEALED ASSEMBLY.

| Z1 | Z2 | Z3 |
|---|---|---|
| R 04 | R20 | R25 |
| R105 | R21 | R28 |
| R106 | R22 | R32 |
| R107 | R23 | R29 |
| R108 | C6 | R30 |
| R109 | R33 | R31 |

9. R1 AND R13 ARE MECHANICALLY COUPLED.
10. -~~~~- NOT AN INTERNAL PART OF THIS UNIT.
11. ALL VOLTAGES ARE MEASURED WITH A LINE VOLTAGE OF 120 VAC.
12. ALL VOLTAGES SHOULD BE WITHIN 10% WHEN MEASURED WITH A V.T.V.M.
13. ALL GROUNDS TIE INTO THE CENTER BOARD, AND GO TO GROUND THROUGH PL1-15.

COMPONENT LAYOUT DIAGRAM 26-G-47.

SCHEMATIC FOR ELECTR-O-LINE CONTROL UNIT

MINNEAPOLIS-HONEYWELL REG CO
BROWN INSTRUMENTS DIVISION
PHILADELPHIA PA. U.S.A.

NONE 12 7-59 26 G-01

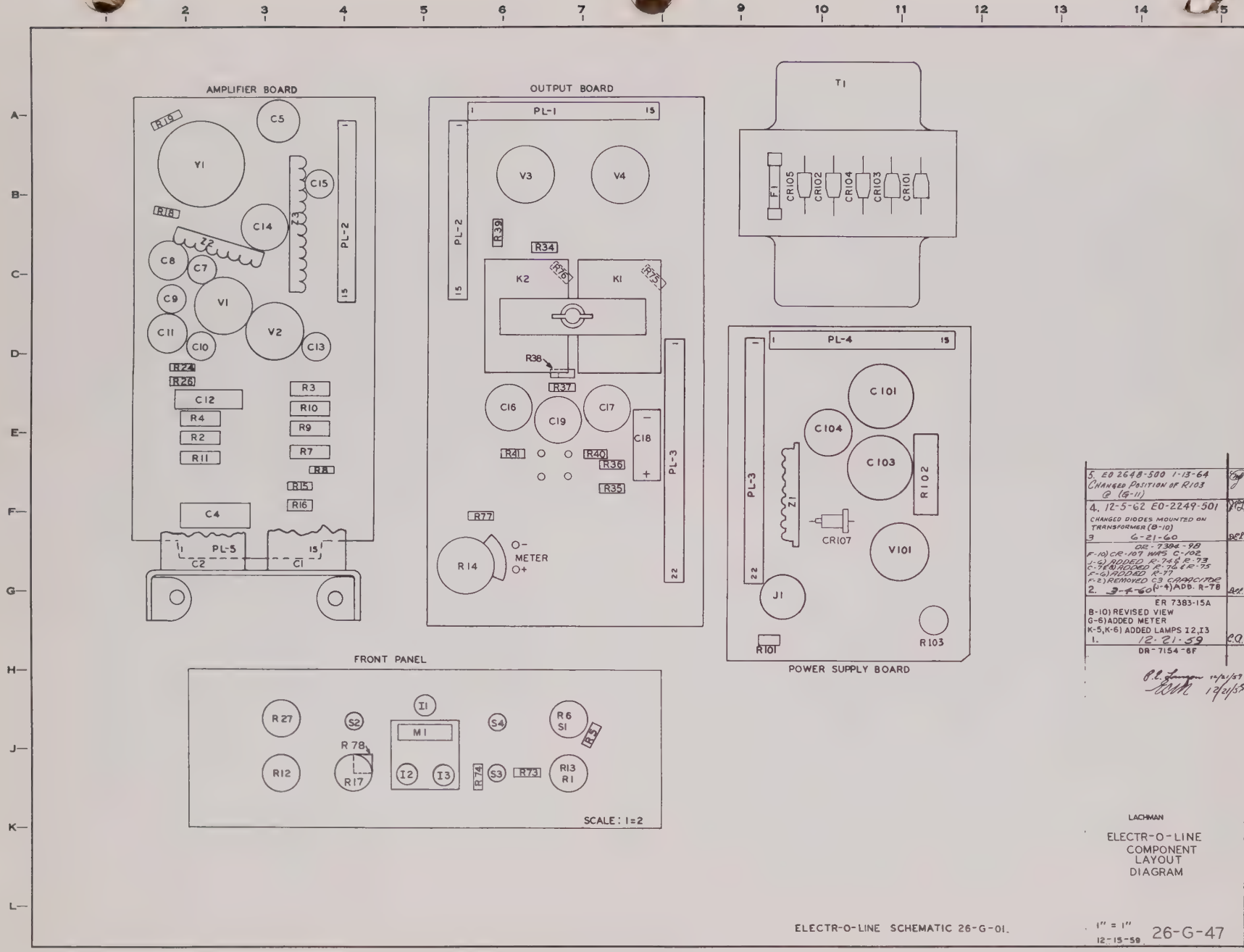
AMPLIFIER BOARD
OUTPUT BOARD
POWER SUPPLY BOARD
FRONT PANEL
PL-1
PL-2
PL-3
PL-4
PL-5
T1
F1
CR105
CR102
CR104
CR103
CR101
Y1
V1
V2
V3
V4
K1
K2
Z1
Z2
Z3
J1
M1
METER
CR107
R101
R102
R103
R14
R27
R12
R17
R78
R6
S1
R13
R1
R74
R73
R5
SCALE: 1=2
5. EO 2648-500 1-13-64
CHANGED POSITION OF R103
@ (G-11)
4. 12-5-62 EO-2249-501
CHANGED DIODES MOUNTED ON
TRANSFORMER (B-10)
3 6-21-60
DR-7384-98
F-10) CR-107 WAS C-102
J-6) ADDED R-74 & R-73
C-7&8) ADDED R-76 & R-75
F-6) ADDED R-77
F-2) REMOVED C3 CAPACITOR
2. 3-4-60 (J-4) ADD. R-78
ER 7383-15A
B-10) REVISED VIEW
G-6) ADDED METER
K-5, K-6) ADDED LAMPS I2, I3
1. 12-21-59
DR-7154-6F
LACHMAN
ELECTR-O-LINE
COMPONENT
LAYOUT
DIAGRAM
ELECTR-O-LINE SCHEMATIC 26-G-01.
1" = 1"
12-15-59
26-G-47

**THREE-MODE CONTROL UNIT** **SERVICE**
**ELECTR-O-PULSE**

## 1. LOCALIZING TROUBLE

a. A thorough knowledge of the principles of controller operation provides the best means for localizing trouble. Troubleshooting should be carried out systematically, taking full advantage of the attached component layout and schematic diagrams.

b. The key to quick efficient troubleshooting is the substitution method. This method consists of replacing either the power supply board, amplifier board, and/or output board with a spare. If the substitution method restores operation, the faulty component has been isolated to a particular board and can be located by tube substitution, signal tracing, voltage measurements, and resistance checks. If the substitution method fails, the trouble is either in the power transformer assembly, connections, or in components mounted on the front panel of the chassis.

## 2. TROUBLESHOOTING TECHNIQUES

After the trouble has been isolated to a particular board or assembly, proceed as follows:

### a. POWER SUPPLY BOARD

(1) Visually inspect the board for obvious troubles.

(2) If no indication of trouble is found, energize the controller.

(3) Observe that tube V101 has an internal glow. Allow a 5-minute warm-up period.

(4) Measure the power supply input and output voltage as given in the attached schematic diagram.

(5) If a voltage is missing, or exceeds ±10 per cent of the schematic value, remove power and check the individual components in the associated circuit.

WARNING: Before checking components on the power supply board, discharge the filter capacitors.

### b. VOLTAGE AMPLIFIER AND OUTPUT BOARDS

(1) Visually inspect the defective board for obvious troubles.

(2) Check the tubes.

(3) If no trouble is found, replace the tubes and energize the controller.

(4) Measure the a-c and d-c operating voltages for each tube. All readings should be within ±10 per cent of the value given in the schematic diagram.

(5) If a reading is incorrect, remove power and check the individual components in the associated circuit.

**c. CONVERTER CHECKOUT.** A buzzing sound from the converter indicates normal operation. If no sound is heard, remove power and proceed as follows:

(1) Check the converter socket and side fed connector for loose or broken connections.

(2) If the connections are in order, remove the side fed connector, apply power and measure the voltage across the connector socket for a reading of 6.0 vac. The converter is defective if it remains inoperative with this voltage present.

**d. TRANSFORMER ASSEMBLY**

(1) Check the assembly for loose wire ends between terminals, broken wires or terminals, etc.

(2) Check the fuse for continuity.

(3) If there are no apparent defects, apply power and check the transformer primary and secondary voltages (see schematic diagram).

(4) To check diodes mounted on the assembly, deenergize the controller and remove the diode.

(5) Connect an ohmmeter across the diode. With the ohmmeter leads in one position, the reading should be from 1 to 10 ohms (forward resistance). With the leads reversed, the reading should be from 5K to 500K ohms (back resistance).

**e. FRONT PANEL ASSEMBLY.** If a trouble has been isolated to the front panel assembly, remove power and check as follows:

(1) Inspect the panel for obvious troubles.

(2) Using an ohmmeter, check the open and closed positions of each switch.

(3) Before checking potentiometers mounted on the panel, remove the voltage amplifier board to eliminate external resistances. (See the schematic diagram for potentiometer values.)

**THREE-MODE CONTROL UNIT**
**ELECTR-O-PULSE**

**SERVICE**

## 3. PERFORMANCE CHECKS

a. When a faulty component has been replaced in a critical area, make performance checks before placing the unit in operation. Table 1 specifies the equipment required.

TABLE 1.

| ITEM | USED TO |
|---|---|
| Interconnecting cable assembly Brown Part No. 363950-1 | Make all external connections to the unit |
| Contact operated timer and/ or 120V 50W light bulb | Measure ON and OFF time |
| (2) 400 ohm 1% and (2) 100 ohm 1% resistors with 3 pt. rotary switch | Simulate proportional resistor with ±10 step deviations |
| 120 vac, 60 cycle power source | Energize the unit |

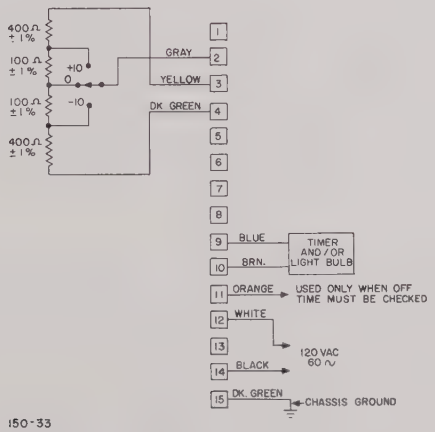


Figure 1. Connections to 15-Wire Test Cable

**b. TEST SET-UP.** Wire the interconnecting cable as shown in figure 1 with the test switch in the "O" position. Remove the plug-in cable from PL1 (see component layout diagram), and insert the interconnecting test cable. Be sure that the word "FRONT" stencilled on the cable connector faces the front of the controller. If the unit does not perform each step as outlined below, refer to the schematic diagram and correct the trouble before proceeding with test.

Warning: To avoid shock hazard, disconnect line power to instrument before removing or replacing power plug PL1.

c. **ON TIME.** Apply a-c power and proceed as follows:

(1) Make initial settings:

| | |
|---|---|
| AUTO-MAN | MAN |
| MANUAL | 10 |
| CYCLE TIME | Min. |
| SENSITIVITY | 10 |
| ON-OFF | On |

(2) Observe that the PWR ON lamp is lighted. Allow a 5-minute warm-up period.

(3) Observe that tube V101 (see component layout diagram) has an internal glow.

(4) Observe that timer connected to test cable indicates no more than 2 seconds.

Note: If a light bulb is used to check ON time, its lighting period should coincide with indications given for timer.

(5) Set CYCLE TIME control to mid-position. Timer should indicate approximately 25 seconds.

(6) Set CYCLE TIME control to "max." position. Timer should indicate no less than 150 seconds.

d. **MANUAL CONTROL**

(1) Make initial settings:

| | |
|---|---|
| CYCLE TIME | Mid-position |
| AUTO-MAN | MAN |
| MANUAL | 5 |
| SENSITIVITY | 10 |
| ON-OFF | ON |

(2) The LOAD ON lamp should flash on and off for equal periods of time when output meter reads 5.0 ±0.5.

(3) If reading is not as above, adjust R14 (see component diagram) to obtain correct meter reading.

(4) Set MANUAL control to the "2" position. Output meter should read 2.0 ±0.5.

(5) Set MANUAL control to the "8" position. Output meter should read 8.0 ±0.5.

(6) Depress and hold PROP. BAND ADJUST. button and vary MANUAL control setting. Note that output meter reading does not change.

**e. PROPORTIONAL BAND**

(1) Make initial settings:

| | |
|---|---|
| PROPORTIONAL BAND | 20 |
| RESET | 0 |
| RATE | 0 |
| MANUAL | 5 |
| AUTO-MAN | MAN |
| CYCLE TIME | Mid-position |
| SENSITIVITY | 10 |

(2) Place test switch in the "0" position.

(3) Observe that output meter reads 5.0 ±0.5.

(4) Place AUTO-MAN switch in "AUTO " position. Output meter should read the same as in step (3).

(5) Place test switch in the +10 position. Output meter should increase by 1.0 ±0.3.

(6) Place test switch in the -10 position. Output meter should read 1.0 ±0.3 below reading of step (3).

(7) Return test switch to the "0" position.

**f. RESET**

(1) Make the same settings as in paragraph e.(1) except set RESET to the "1" position.

(2) Observe that output meter reads 5.0 ±0.5.

(3) Place AUTO-MAN switch in "AUTO " position. Observe that output meter reads the same as in step (2).

(4) Place test switch in the +10 position. Output meter reading should instantaneously increase by 1.0 ±0.3 and then gradually continue increasing at the rate of one major scale graduation of the meter per minute.

(5) Place test switch in the -10 position. Output meter should instantaneously decrease by 1.0 ±0.3 and then gradually continue decreasing at the rate of one major scale graduation of the meter per minute.

(6) Return test switch to the "0" position.

**g. RATE**

(1) Make same settings as in paragraph e.(1) except set RATE to the "2" position.

(2) Adjust MANUAL control until output meter reads 5.0 ±0.5.

(3) Place AUTO-MAN switch in "AUTO " position. Note output meter reading.

(4) Place test switch in the +10 position. Output meter should instantaneously read maximum and then gradually decrease in reading. At the end of 2-1/2 minutes, meter should read 1.0 ±0.3 greater than reading noted in step (3).

(5) Place test switch in the -10 position. Output meter should instantaneously read minimum and then gradually increase in reading. At end of 2-1/2 minutes, meter should read 1.0 ±0.3 below reading noted in step (3).

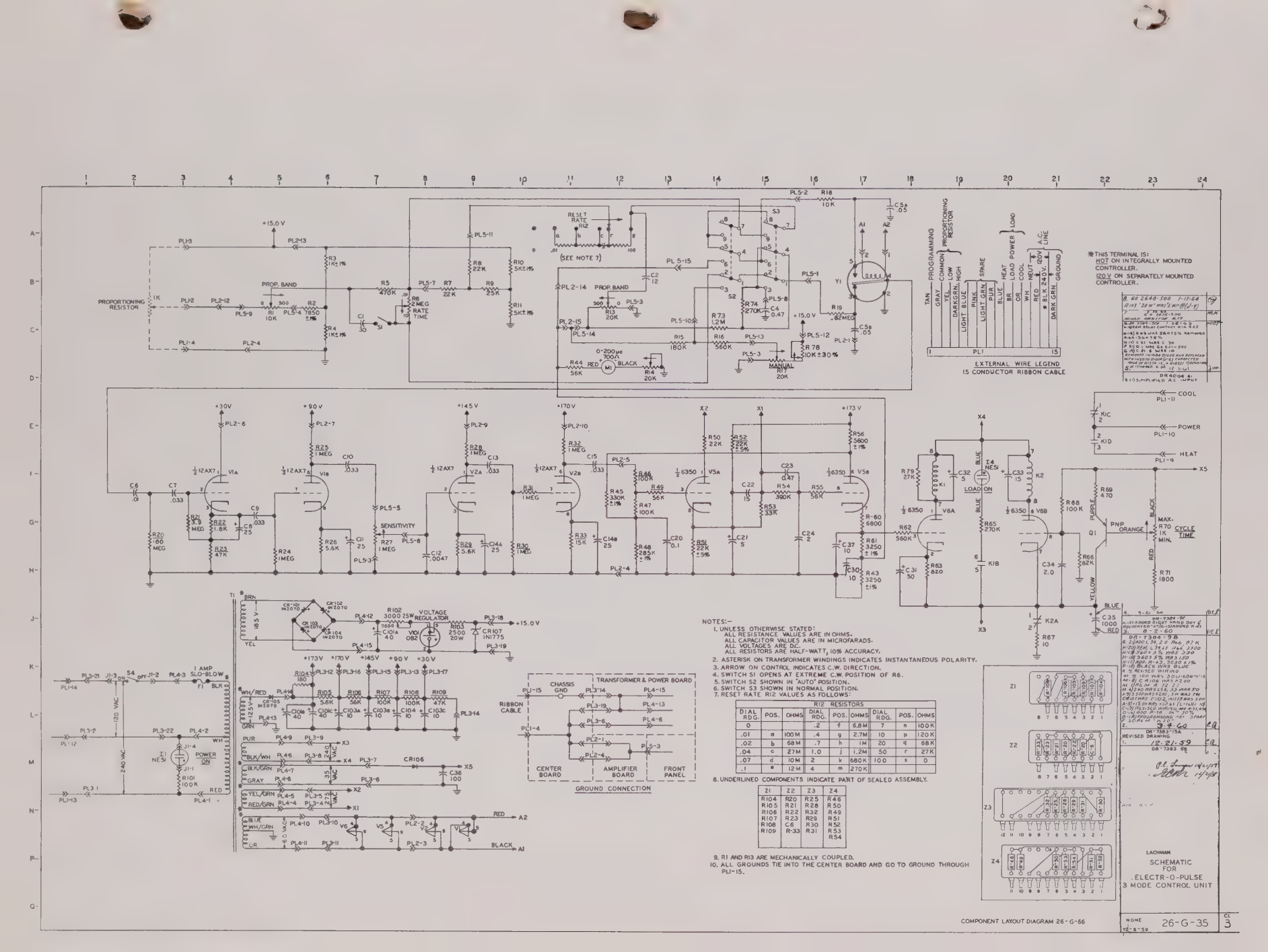


NOTES:—

1. UNLESS OTHERWISE STATED:
   ALL RESISTANCE VALUES ARE IN OHMS.
   ALL CAPACITOR VALUES ARE IN MICROFARADS.
   ALL VOLTAGES ARE D.C.
   ALL RESISTORS ARE HALF-WATT, 10% ACCURACY.
2. ASTERISK ON TRANSFORMER WINDINGS INDICATES INSTANTANEOUS POLARITY.
3. ARROW ON CONTROL INDICATES C.W. DIRECTION.
4. SWITCH S1 OPENS AT EXTREME C.W. POSITION OF R6.
5. SWITCH S2 SHOWN IN 'AUTO' POSITION.
6. SWITCH S3 SHOWN IN NORMAL POSITION.
7. RESET RATE R12 VALUES AS FOLLOWS:

| R12 RESISTORS | | | | | | | | |
|---|---|---|---|---|---|---|---|---|
| DIAL RDG. | POS. | OHMS | DIAL RDG. | POS. | OHMS | DIAL RDG. | POS. | OHMS |
| 0 | | | .2 | f | 6.8M | 7 | n | 100K |
| .01 | a | 100M | .4 | g | 2.7M | 10 | p | 120K |
| .02 | b | 68M | .7 | h | 1M | 20 | q | 68K |
| .04 | c | 27M | 1.0 | j | 1.2M | 50 | r | 27K |
| .07 | d | 10M | 2 | k | 680K | 100 | s | 0 |
| .1 | e | 12M | 4 | m | 270K | | | |

8. UNDERLINED COMPONENTS INDICATE PART OF SEALED ASSEMBLY.

| Z1 | Z2 | Z3 | Z4 |
|---|---|---|---|
| R104 | R20 | R25 | R46 |
| R105 | R21 | R28 | R50 |
| R106 | R22 | R32 | R49 |
| R107 | R23 | R29 | R51 |
| R108 | C6 | R30 | R52 |
| R109 | R-33 | R31 | R53 |
| | | | R54 |

9. R1 AND R13 ARE MECHANICALLY COUPLED.
10. ALL GROUNDS TIE INTO THE CENTER BOARD AND GO TO GROUND THROUGH PLI-15.

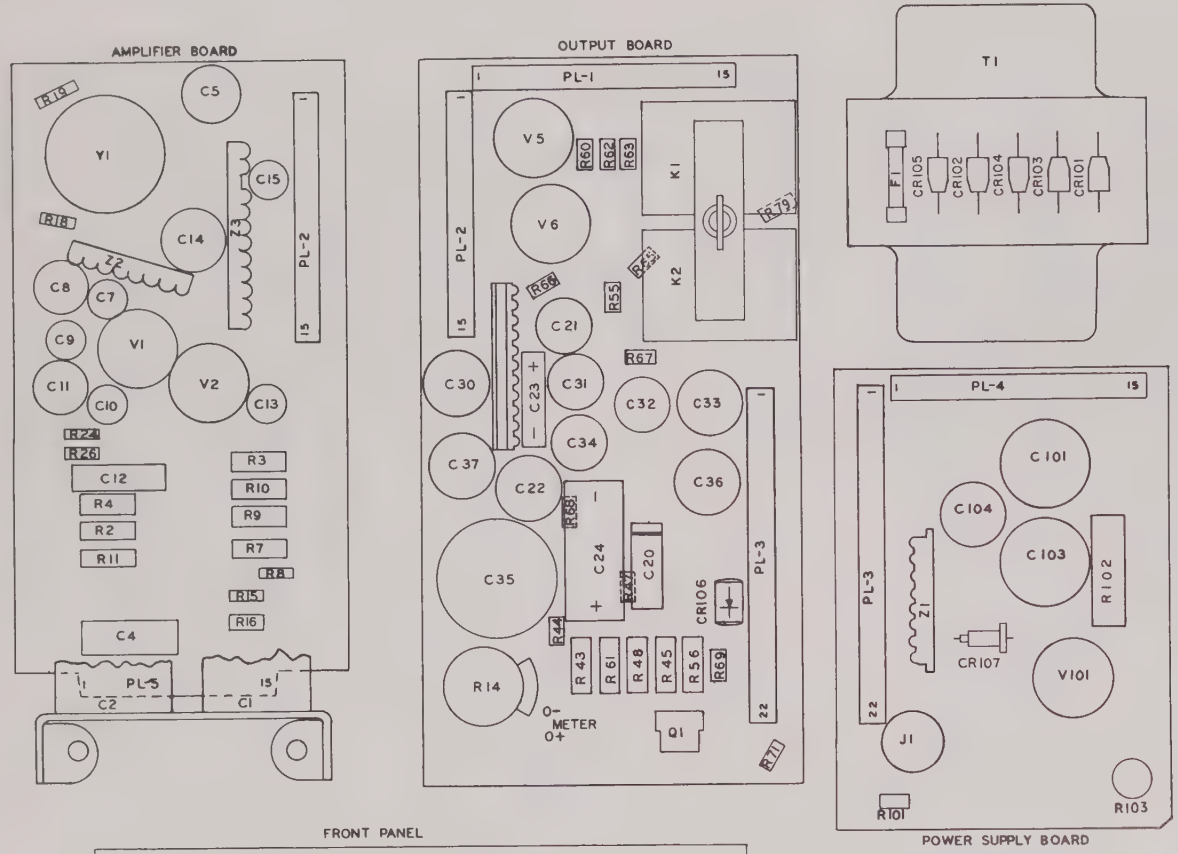


4. EO 2648-500 1-13-64 RJG
CHANGED POSITION OF R103 @ (G-11). ADDED R79 @ (B-8)

3. 1-26-64
E.O. Z249-501
B-7) R-63 WAS R-69, MOVED R-63
C-10-1 WAS G.E. Z31-505
F-9) CR101 WAS K-200
D-7) REVERSED POSITION OF C-32 & C-33
CHANGED DIODES MOUNTED ON TRANSFORMER (B-10) RCT

2 6-21-60 RCT

DR-7384-98
F-10) CR-107 WAS C-102
E-8) REMOVED R-72
F-6) ADDED R-73 & R-74
F-2) REMOVED C-3 CAPACITOR
(F-4) ADD. R-78
1. 3-4-60 DEE

DR. 7384-1E

P.E. Langan 3/4/60
3/9/60

P.E. LANGAN CAL Alwarter

ELECTR-O-PULSE
COMPONENT
LAYOUT
DIAGRAM

ELECTR-O-PULSE SCHEMATIC 26-G-35

1"=1"
2-18-60

26-G-66

THREE-MODE CONTROL UNIT SERVICE

ELECTR-O-VOLT

## 1. LOCALIZING TROUBLE

a. A thorough knowledge of the principles of controller operation provides the best means for localizing trouble. Troubleshooting should be carried out systematically, taking full advantage of the attached component layout and schematic diagrams.

b. The key to quick efficient troubleshooting is the substitution method. This method consists of replacing either the power supply board, amplifier board, and/or output board with a spare. If the substitution method restores operation, the faulty component has been isolated to a particular board and can be located by tube substitution, signal tracing, voltage measurements, and resistance checks. If the substitution method fails, the trouble is either in the power transformer assembly, connections, or in components mounted on the front panel of the chassis.

## 2. TROUBLESHOOTING TECHNIQUES

After the trouble has been isolated to a particular board or assembly, proceed as follows:

### a. POWER SUPPLY BOARD

(1) Visually inspect the board for obvious troubles.

(2) If no indication of trouble is found, energize the controller.

(3) Observe that tube V101 has an internal glow. Allow a 5-minute warm-up period.

(4) Measure the power supply input and output voltages as given in the attached schematic diagram.

(5) If a voltage is missing, or exceeds ±10 per cent of the schematic value, remove power and check the individual components in the associated circuit.

WARNING: Before checking components on the power supply board, discharge the filter capacitors.

### b. VOLTAGE AMPLIFIER AND OUTPUT BOARDS

(1) Visually inspect the defective board for obvious troubles.

(2) Check the tubes.

(3) If no trouble is found, replace the tubes and energize the controller.

(4) Measure the a-c and d-c operating voltages for each tube. All Readings should be within ±10 per cent of the value given in the schematic diagram.

(5) If a reading is incorrect, remove power and check the individual components in the associated circuit.

**c. CONVERTER CHECKOUT.** A buzzing sound from the converter indicates normal operation. If no sound is heard, remove power and proceed as follows:

(1) Check the converter socket and side fed connector for loose or broken connections.

(2) If the connections are in order, remove side fed connector, apply power and measure the voltage across the connector socket for a reading of 6.0 vac. The converter is defective if it remains inoperative with this voltage present.

**d. TRANSFORMER ASSEMBLY**

(1) Check the assembly for loose wire ends between terminals, broken wires or terminals, etc.

(2) Check the fuse for continuity.

(3) If there are no apparent defects, apply power and check the transformer primary and secondary voltages (see schematic diagram).

(4) To check diodes mounted on the assembly, deenergize the controller and remove the diode.

(5) Connect an ohmmeter across the diode. With the ohmmeter leads in one position, the reading should be from 1 to 10 ohms (forward resistance). With the leads reversed, the reading should be from 5K to 500K ohms (back resistance).

**e. FRONT PANEL ASSEMBLY.** If a trouble has been isolated to the front panel assembly, remove power and check as follows:

(1) Inspect the panel for obvious troubles.

(2) Using an ohmmeter, check the open and closed positions of each switch.

(3) Before checking potentiometers mounted on the panel, remove the voltage amplifier board to eliminate external resistances. (See the schematic diagram for potentiometer values.)

**THREE-MODE CONTROL UNIT**
**ELECTR-O-VOLT**

**SERVICE**

## 3. PERFORMANCE CHECKS

a. When a faulty component has been replaced in a critical area, make performance checks before placing the unit in operation. Table 1 specifies the equipment required.

TABLE 1

| ITEM | USED TO |
|---|---|
| Interconnecting cable assembly Brown Part No. 363950-1 | Make all external connections to the unit. |
| (2) 400 ohm 1% and (2) 100 ohm 1% resistors with 3-pt. rotary switch | Simulate proportional resistor with ±10 step deviations |
| (1) 5600 ohm 10% resistor | Simulate load |
| 120 vac, 60 cycle supply | Energize the unit |

**b. TEST SETUP**

(1) Remove the controller from its installation and place it on a non-metallic working surface. Wire the interconnecting cable assembly as shown on figure 1, with the test switch in the "0" position.

WARNING: To avoid shock hazard, disconnect line power to instrument before removing or replacing power plug PL1.

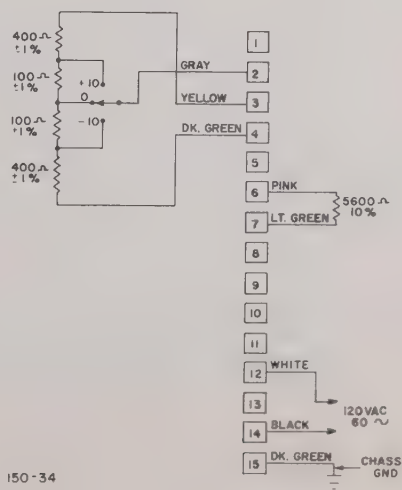


Figure 1. Connections to 15-Wire Test Cable

(2) Plug the cable connector into the female connector located on the rear of the output amplifier board, being careful that the word "FRONT" stencilled on the connector faces to the front of the controller.

### c. MANUAL CONTROL

(1) Make initial settings:

| | |
|---|---|
| AUTO-MAN switch | MAN |
| MANUAL control | 5 |
| ON-OFF switch | ON |
| SENSITIVITY control | 10 |

(2) When placing the ON-OFF switch in the "ON" position, observe that the POWER indicator lamp is lighted. Allow for a five-minute warm-up period.

(3) Install a d-c voltmeter with the positive (+) lead to pin 7 of tube V5 (see the Component Layout Diagram) and the negative (—) meter lead to point 14 on connector PL-2. Adjust R57 to obtain a meter reading of 25 volts.

NOTE: If the actual installation has a load resistance other than the simulated 5600 ohms load of the test setup, this adjustment will have to be rechecked when placing the unit back into operation.

(4) Observe that tube V101 (see the Component Layout Diagram) has a blue-purple internal glow.

(5) Observe that the controller output meter reads 5 ±1%. If it doesn't, adjust potentiometer R14 to obtain proper meter reading.

(6) Set the MANUAL control to the "2" position. The output meter should read 2.0 ±0.5.

(7) Set the MANUAL control to the "8" position. The output meter should read 8.0 ±0.5.

(8) Push in and hold the PROP. BAND ADJUST switch and make changes in the MANUAL control setting. Note that the controller output meter does not change reading.

(9) Set the MANUAL control to the "5" position. The output meter should read 5 ±1%.

### d. PROPORTIONAL BAND

(1) Make initial settings:

| | |
|---|---|
| PROPORTIONAL BAND control | 20 |
| RESET RATE control | 0 |
| RATE TIME control | 0 |
| MAN-AUTO switch | AUTO |

(2) Place the test setup switch in the "0" position.

(3) Observe that the controller output meter reads 5 ±0.5.

(4) Place the test setup switch in the +10 position. The output meter reading should increase by 1.0 ±3%.

(5) Place the test setup switch in the -10 position. The output meter reading should read 1.0 ±3% below the reading of step (3).

(6) Return the test setup switch to the "0" position.

### e. RESET RATE

(1) Make initial settings as per paragraph b(1) above except set RESET RATE control to the "1" position.

(2) Observe that the controller output meter reads 5 ±0.5.

(3) Place the test setup switch in the +10 position. The output meter reading should instantaneously increase by 1.0 ±3% and then gradually continue increasing at the rate of one major scale graduation of the meter per minute.

(4) Place the test setup switch in the "0" position.

(5) Place the AUTO-MAN switch in the "MAN" position. With the MANUAL control, adjust the controller output to obtain a reading of 5 ±0.5 on the output meter. Return the AUTO-MAN switch to the "AUTO" position.

(6) Place the test setup switch in the -10 position. The output meter should instantaneously decrease by 1.0 ±3% and then gradually continue decreasing at the rate of one major scale graduation of the meter per minute.

(7) Return the test setup switch to the "0" position.

f. RATE TIME

(1) Make initial settings:

| | |
|---|---|
| PROPORTIONAL BAND control | 20 |
| RESET RATE control | 0 |
| AUTO-MAN switch | MAN |
| RATE TIME control | 2 |

(2) Using the MANUAL control, adjust the controller output to obtain a reading of 5 ±0.5 on the output meter.

(3) Place the test setup switch in the "0" position.

(4) Place the AUTO-MAN switch in the "AUTO" position. Observe the meter reading.

(5) Set the test setup switch in the +10 position. The controller output meter should instantaneously read maximum and then gradually decrease in reading. At the end of 2-1/2 minutes, the meter should read 1.0 ±3% greater than the reading observed in step (4).

## 4. VOLTAGE AND RESISTANCE CHECKS

a. VOLTAGE CHECKS. Prior to performing the following checks, remove the control unit from the installation and place it on a non-metallic working surface.

(1) Use the same test setup that was used in the performance checks. Plug in the connector and apply a-c power.

(2) Make initial settings:

| | |
|---|---|
| PROPORTIONAL BAND | 100 |
| RESET RATE control | 1 |
| RATE TIME control | 0 |
| AUTO-MAN switch | MAN |
| MANUAL control | 5 |
| SENSITIVITY | 10 |
| ON-OFF switch | ON |

(3) Place the test setup switch in the "0" position.

(4) Using a vacuum tube voltmeter, make the various voltage checks as listed in table 2. Refer to the Component Layout Diagram for the various connector (PL) locations.

### b. RESISTANCE CHECKS

(1) Use the same test setup that was used in the performance checks. Plug in the connector, but DO NOT apply a-c power.

(2) Remove all vacuum tubes from their sockets.

(3) Make the same initial settings that were made for the voltage checks.

(4) Using an ohmmeter, make the various resistance checks as listed in table 3. All readings are taken with respect to ground. Some readings may be initially affected due to capacitor charging. Refer to the Component Layout Diagram for the locations of tubes and connectors.

TABLE 2

VOLTAGE CHECKS

| FROM | TO | READING |
|---|---|---|
| PL2- 6 | GND | 30 VDC |
| - 7 | GND | 90 VDC |
| - 9 | GND | 145 VDC |
| -10 | GND | 170 VDC |
| -12 | GND | 7 VDC |
| -13 | GND | 14 VDC |
| -14 | GND | 7 VDC |
| -15 | GND | 7 VDC |
| - 2 | PL2-3 | 6 VAC |
| PL3-12 | GND | 173 VDC |
| -13 | GND | 90 VDC |
| -14 | GND | 0 VDC |
| -15 | GND | 145 VDC |
| -16 | GND | 170 VDC |
| -17 | GND | 30 VDC |
| -18 | GND | 13.6 VDC |
| -19 | GND | 0 VDC |
| - 2 | PL3-21 | 120 VAC |
| - 4 | - 5 | 275 VAC |
| -10 | -11 | 6.0 VAC |
| -21 | - 1 | 270 VAC |

TABLE 3

RESISTANCE CHECKS

| TUBE | READING | POINT | READING |
|---|---|---|---|
| V1-1 | 40 K | PL2 | |
| -2 | 4 Meg | | |
| -3 | 50 K | 1 | 0 |
| -4 | 1 ohm | 2 | 1 ohm |
| -5 | 1 ohm | 3 | 1 ohm |
| -6 | 1 Meg | 4 | 0 |
| -7 | 1 Meg | 5 | .5 Meg |
| -8 | 5.6 K | 6 | 40 K |
| -9 | 1 ohm | 7 | 80 K |
| | | 8 | .5 Meg |
| V2-1 | 1 Meg | 9 | 45 K |
| -2 | 1 Meg | 10 | 5.6 K |
| -3 | 10 K | 11 | .5 K |
| -4 | 1 ohm | 12 | .5 K |
| -5 | 1 ohm | 13 | .6 K |
| -6 | 1 Meg | 14 | 3 K |
| -7 | 2 Meg | 15 | 3 K |
| -8 | 15 K | | |
| -9 | 1 ohm | PL3 | |
| V5-1 | 77 K | 1 | Inf. |
| -2 | 22 K | 2 | Inf. |
| -3 | 300 K | 3 | Inf. |
| -4 | 3 ohms | 4 | 55 K |
| -5 | 3 ohms | 5 | 55 K |
| -6 | 6 K | 6 | Inf. |
| -7 | 13 K | 7 | Inf. |
| -8 | .5 Meg | 8 | Inf. |
| -9 | 3 ohms | 9 | Inf. |
| | | 10 | 1 ohm |
| V101-1 | 1.5 K | 11 | 1 ohm |
| -2 | 0 | 12 | .18 K |
| -5 | 4.7 K | 13 | 80 K |
| | | 14 | 0 |
| | | 15 | 45 K |
| | | 16 | 5.6 K |
| | | 17 | 40 K |
| | | 18 | .6 K |
| | | 19 | 0 |
| | | 20 | Inf. |
| | | 21 | Inf. |
| | | 22 | Inf. |

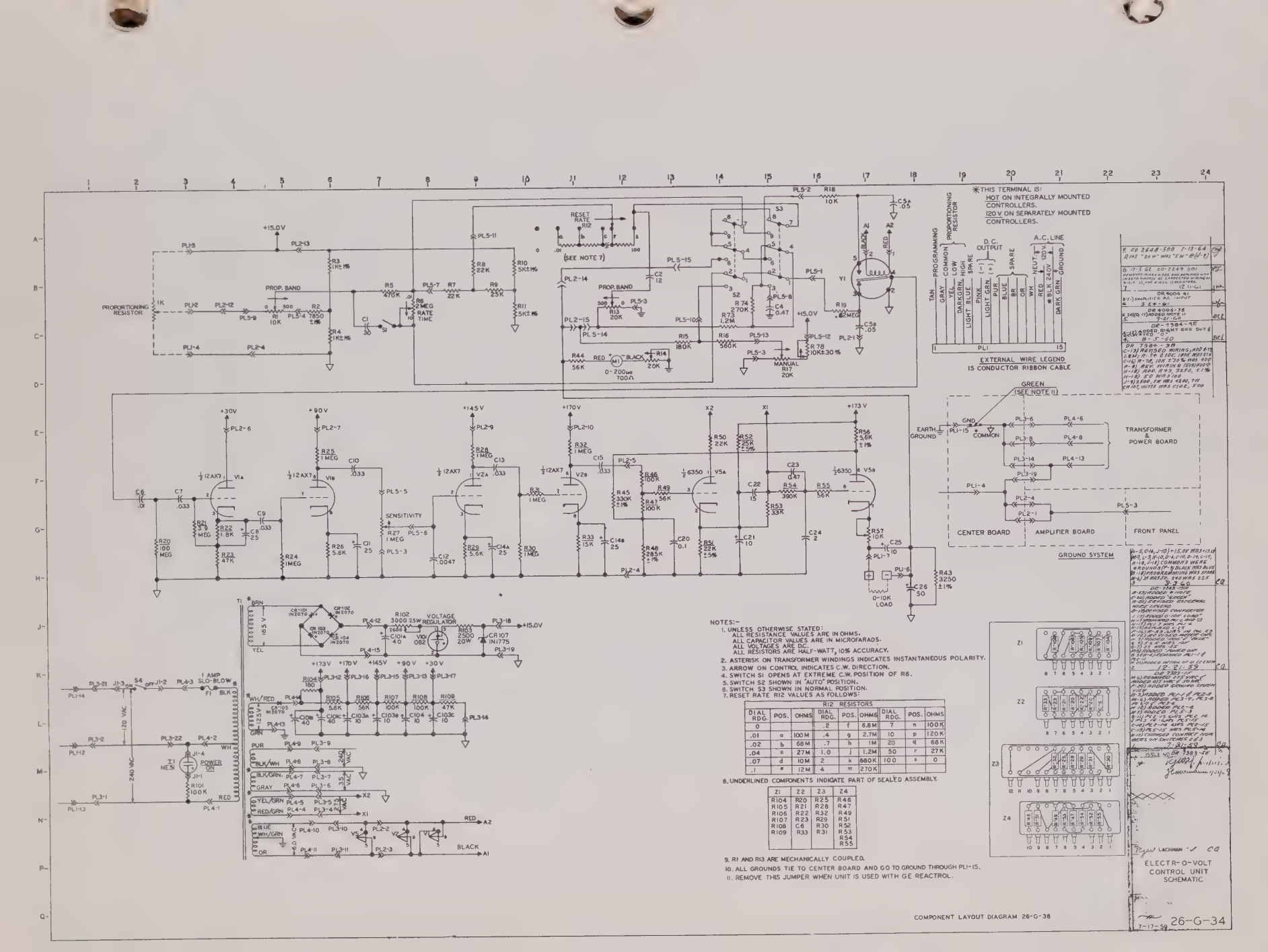
ELECTR-O-VOLT CONTROL UNIT SCHEMATIC
26-G-34
7-17-59
COMPONENT LAYOUT DIAGRAM 26-G-36
GROUND SYSTEM
EXTERNAL WIRE LEGEND
15 CONDUCTOR RIBBON CABLE
TRANSFORMER & POWER BOARD
CENTER BOARD
AMPLIFIER BOARD
FRONT PANEL
NOTES:-
1. UNLESS STATED: ALL RESISTANCE VALUES ARE IN OHMS. ALL CAPACITOR VALUES ARE IN MICROFARADS. ALL VOLTAGES ARE D.C. ALL RESISTORS ARE HALF-WATT, 10% ACCURACY.
2. ASTERISK ON TRANSFORMER WINDINGS INDICATES INSTANTANEOUS POLARITY.
3. ARROW ON CONTROL INDICATES C.W. DIRECTION.
4. SWITCH S1 OPENS AT EXTREME C.W. POSITION OF R6.
5. SWITCH S2 SHOWN IN "AUTO" POSITION.
6. SWITCH S3 SHOWN IN NORMAL POSITION.
7. RESET RATE R12 VALUES AS FOLLOWS:
8. UNDERLINED COMPONENTS INDICATE PART OF SEALED ASSEMBLY.
9. R1 AND R13 ARE MECHANICALLY COUPLED.
10. ALL GROUNDS TIE TO CENTER BOARD AND GO TO GROUND THROUGH PLI-15.
11. REMOVE THIS JUMPER WHEN UNIT IS USED WITH G.E. REACTROL.
R12 RESISTORS
DIAL RDG. | POS. | OHMS | DIAL RDG. | POS. | OHMS | DIAL RDG. | POS. | OHMS
0 | | | .2 | f | 6.8M | 7 | n | 100K
.01 | a | 100M | .4 | g | 2.7M | 10 | p | 120K
.02 | b | 68M | .7 | h | 1M | 20 | q | 68K
.04 | c | 27M | 1.0 | j | 1.2M | 50 | r | 27K
.07 | d | 10M | 2 | k | 680K | 100 | s | 0
.1 | e | 12M | 4 | m | 270K
Z1 | Z2 | Z3 | Z4
R104 | R20 | R25 | R46
R105 | R21 | R28 | R47
R106 | R22 | R32 | R49
R107 | R23 | R29 | R51
R108 | C8 | R30 | R52
R109 | R33 | R31 | R53
R54
R55

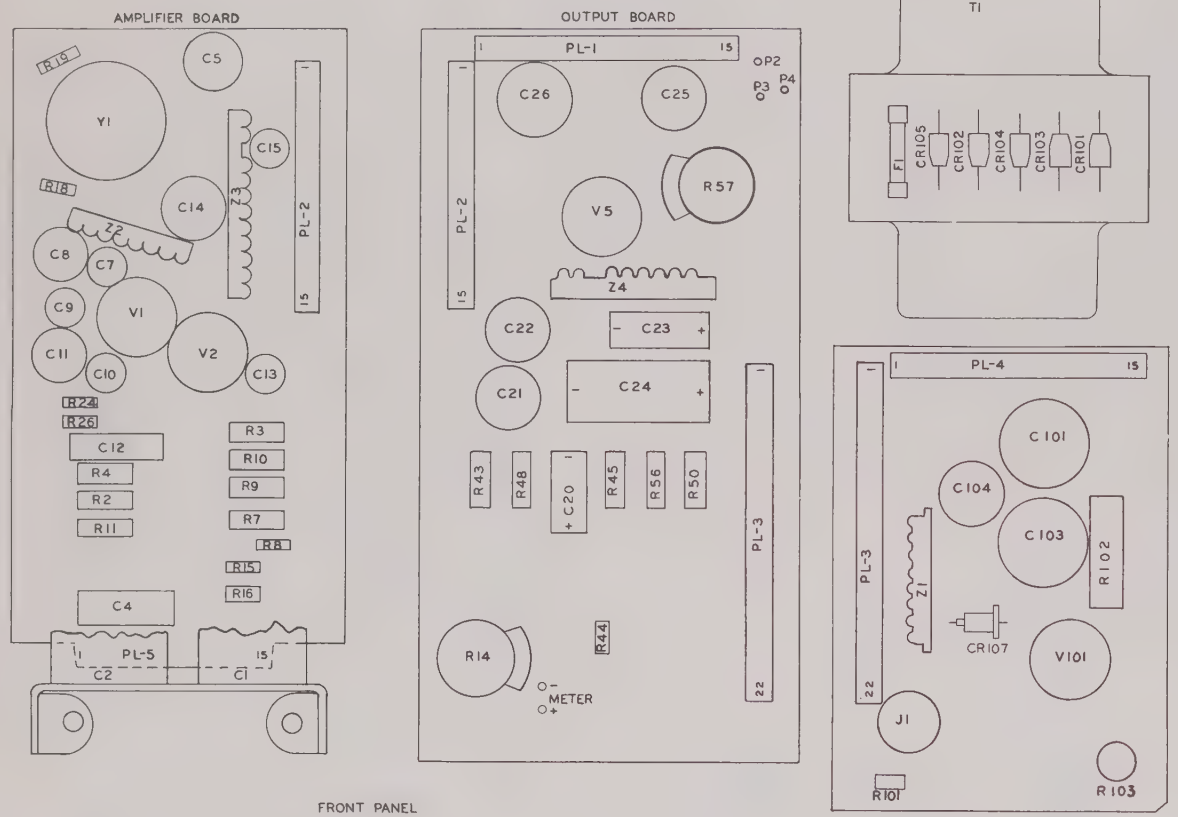


ELECTR-O-VOLT SCHEMATIC 26-G-34

5. EO 2648-500 1-13-64 — CHANGED POSITION OF R103 RESISTOR (H-11)

4. 1-23-63 EO-2249-501 — CHANGED DIODES MOUNTED ON TRANSFORMER (B-10)

3 6-21-60 — DR-7384-9B
F-10) CR107 WAS C-10Z
J-6) ADDED R-73 & R-74
F-3) REMOVED C3 CAPACITOR

2. 5-3-60(P-1) ADD. R18 — DR-7383-15A
B-10) REVISED VIEW
E&D-7) ADDED POLARITY TO C23, C24 & C20
B-3) REVISED Z3
G-6) ADDED METER & TERMINALS.

1. 7-31-59

FORM NO. F-2145-4 DR-7383-1E

| ISSUE NO. | ENGR | DATE | APP |
|---|---|---|---|
| APP. FOR RELEASE | SECT HD | | |
| APP. FOR VENDORS QUOTATION | ENGR | DATE | |
| | SECT HD | DATE | |

| | b | c | d | e | f | g | h | j |
|---|---|---|---|---|---|---|---|---|
| M-H | | | | | | | | |
| TORONTO | | | | | | | | |
| LONDON | | | | | | | | |

| REPRODUCTION LOCATED AT | JOB NOS | USED ON |
|---|---|---|
| | | |

LIMITS—ON DIMENSIONS WHERE LIMITS ARE NOT SHOWN USE THE FOLLOWING
ON ALL DECIMAL DIMENSIONS ± .005
ON ALL OTHER LINEAR DIMENSIONS ± 1/64
ANGULAR DIMENSIONS ± 1°

| DES. ENGR. | DRAWN | CHECKED | APPROVED |
|---|---|---|---|
| | LACHMAN | | |

# ELECTR-O-VOLT COMPONENT LAYOUT DIAGRAM

MINNEAPOLIS-HONEYWELL REG. CO.
BROWN INSTRUMENTS DIVISION
PHILADELPHIA, PA. U.S.A.

| SCALE | DRAWING NO |
|---|---|
| 1 = 1 | 26-G-36 |
| DATE 7-21-59 | |

F. R. WEIL MFG. PHILA.

## REGULATED POWER SUPPLY — SERVICE

## 1. GENERAL

The regulated power supply is calibrated and ready for use when it leaves the factory; however, it may be necessary to perform the following procedures from time to time.

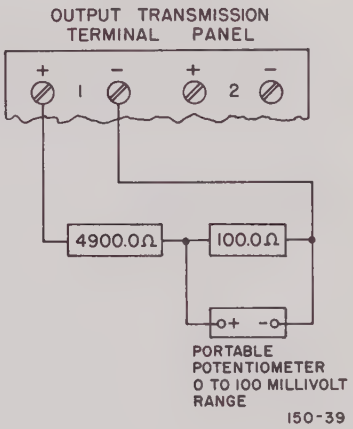


Figure 1. Test setup for regulated power supply

## 2. CALIBRATION

### a. LOAD ADJUSTMENT

(1) Disconnect the output leads of the regulated power supply at the positive (+) and negative (-) terminals of the power supply cover to deenergize the output transmission circuit.

(2) Measure the resistance between the disconnected leads to the output transmission circuit with the auxiliary device open circuited; the resistance should be approximately 500 ohms; if not, adjust the LOAD potentiometer on the OUTPUT PANEL to obtain this resistance value.

(3) Connect the transmission circuit leads to the regulated power supply.

(4) Connect two decade resistance boxes set to the proper resistance values (4900.0 and 100.0 ohms) across the positive (+) and negative (-) terminals of the transmission terminal panel as shown in figure 1.

(5) Connect the leads of a portable potentiometer (0 to 100 mv range) across the terminals of the decade resistance box set to 100.0 ohms; refer to figure 1 and observe proper polarity.

(6) Operate the instrument as a single-record indicator (refer to operation section).

(7) Apply millivolt signals to the instrument to drive the indicator to various cardinal points on the scale.

NOTE: A properly calibrated instrument is a prerequisite to this step.

(8) Calibrate the transmission circuit from 0 to 100 mv readings across the 100 ohm resistor; the readings should correspond to 0 to 100% scalar indications for the recorder, and slidewire linearity should be within 0.5%. If the readings are consistently high or low, adjust the ZERO potentiometer on the OUTPUT PANEL; if the readings are high at one end of scale and low at the other, adjust the SPAN potentiometer (on the regulated power supply). If both ZERO and SPAN settings are incorrect, adjust the ZERO potentiometer first and then adjust the SPAN potentiometer; a slight readjustment of the ZERO potentiometer may be required. If adjusting the ZERO potentiometer does not correct for a zero shift of the transmitting slidewire, refer to the slidewire service section and follow the procedures listed under ZERO ADJUST.

## HELICAL SLIDEWIRE SERVICE

### 1. GENERAL.

The following paragraphs list the procedures required to calibrate, remove, and replace a helical slidewire.

### 2. ZERO ADJUSTMENT

a. Remove the cover from the helical slidewire.

b. For instruments with millivolt inputs, apply a millivolt signal to drive the indicator to the lowest cardinal point on the scale; for resistance bulb thermometer activations, set a decade resistance box to the resistance value which will drive the pen or indicator to midscale.

NOTE: For instruments with a helical transmitting slidewire, a properly calibrated instrument is a prerequisite to the adjustment for a transmitting slidewire zero shift.

c. Loosen the clamping screw in the helical slidewire assembly (figure 1).

d. Turn the adjusting screw at the base of the helical slidewire assembly to move the contact guide arm clockwise to correct for a high reading or counterclockwise to correct for a low reading; tighten the clamping screw.

e. Check the readings at various points on the scale and readjust contact guide arm position if necessary.

### 3. REMOVAL

a. Swing the chassis out of the case and remove the gear housing cover from the left sideplate of the chassis.

b. Loosen the drive cable clamp on the drive gear cable drum (refer to figure 1).

NOTE: If the instrument is supplied with auxiliary switches, loosen the knurled nut which clamps the switch operating cam, and turn the cam until one of the holes in the cam is in line with the screw in the drive cable clamp. The cable clamp can then be loosened without removing the cam.

c. Loosen the knurled screw at the right side of the compartment housing directly above the pen carriage or print wheel carriage; raise the compartment housing.

d. Loosen the screws in the cable clamp on the carriage of the pen or print wheel.

e. Hold the top section of the slidewire cable drum and remove the cable drum screw from the center of the cable drum. Remove the top of the cable drum.

693-0001-153

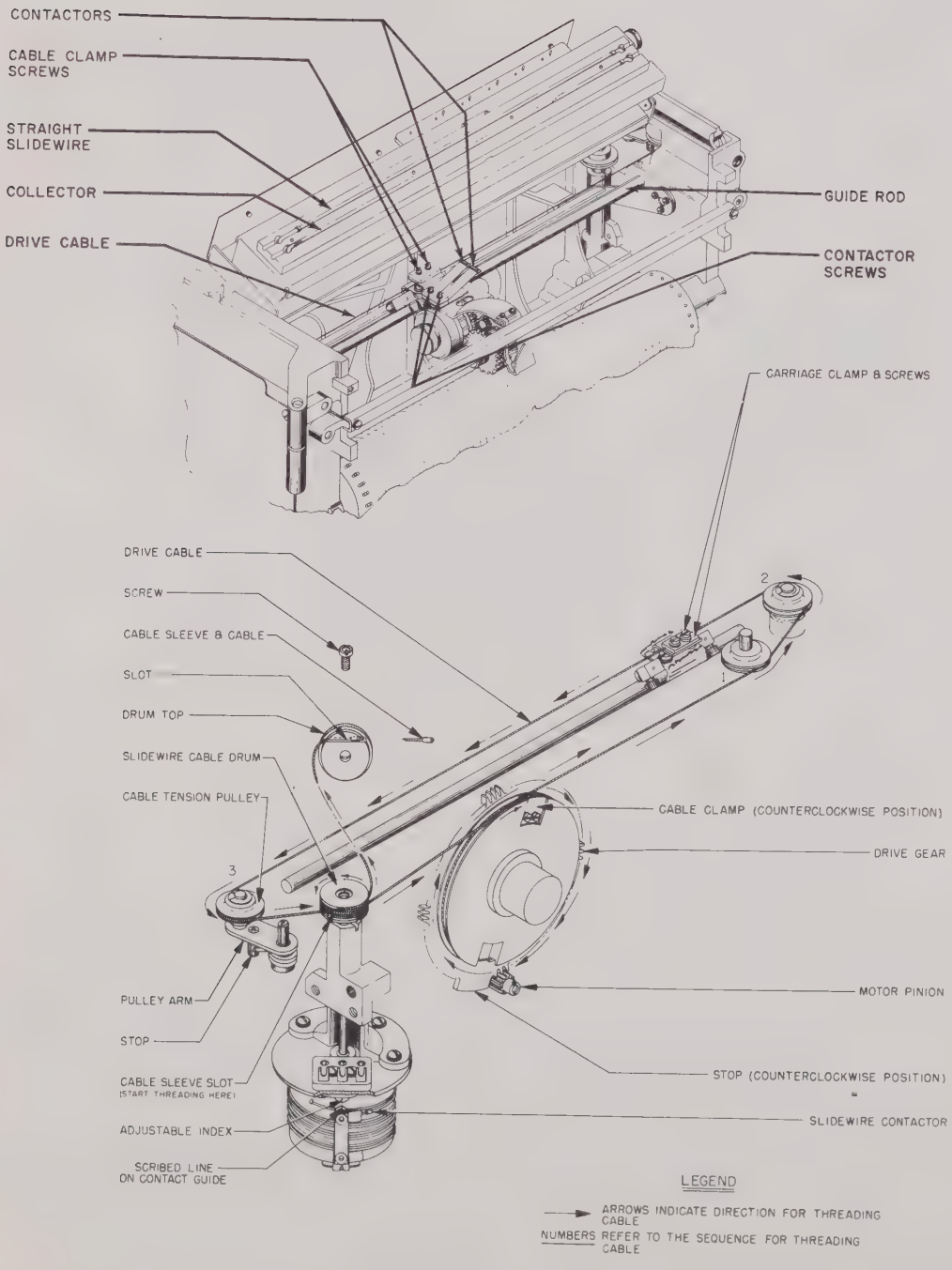


Figure 1. Installation of Slidewire

f. Slip the end of the cable out of the slot in the cable drum and remove the cable taking care not to kink it.

g. Remove three mounting screws from the bracket and bearing assembly and remove the slidewire assembly.

## 4. CONTACT GUIDE PRESSURE

The contactor on the slidewire is held in place by the pressure of the contact guide which must be sufficient to prevent it from wobbling in the contact guide slot but not great enough to prevent it from rolling freely.

a. Check to determine whether the pressure on the contactor is correct:

(1) Remove the cover from the slidewire, and lift the contact guide away from the slidewire so that the contactor drops out.

(2) Pressure is correct if, with the contactor removed, the clearance between the guide and the slidewire windings are adjusted to the proper distances as listed below:

| Contact Guide Thickness | .014" | .010" |
|---|---|---|
| Silver Contact | 3/64" | .010" |
| Silver Contact With Steel Pin | 1/32" | Touching |

b. If the pressure is incorrect, proceed as follows:

(1) Bend the contact guide arm until it is the correct distance from the slidewire windings and parallel to the vertical axis of the slidewire. Bend the contact guide until it is the correct distance from the slidewire windings, keeping it parallel to the vertical axis of the slidewire.

NOTE: To simplify the bending of the contact guide arm (and contact guide) in order to obtain proper parallelism and spacing, loosen the set screws and remove contact guide assembly.

(2) Insert the shaft of the slidewire contactor in the hole in the end of the slidewire key, and place the contactor under the contact guide so that it rests in the slot and gently remove key. For contactors having a shaft on one side only, the shaft should point away from the contact guide arm.

(3) Check the operation of the slidewire contactor along the slidewire to see that it rolls freely without binding or wobbling.

c. A few instruments were furnished with dull, nickel-plated phosphor bronze or beryllium copper contact guides. These guides exert the correct pressure if they just rest on the slidewire windings with the contact removed.

## 1. INTERNAL WIRING DIAGRAM NUMERICAL INDEX

| | | |
|---|---|---|
| 354786 | 369854 | 371548 |
| 354787 | 369855 | 371549 |
| 354788 | 369856 | 371550 |
| 354789 | 369857 | 371551 |
| 354790 | 369858 | 371552 |
| 354791 | 369859 | 371553 |
| 354792 | 369860 | 371554 |
| 354793 | 369861 | 371555 |
| 354794 | 369862 | 371556 |
| 355176 | 369863 | 371557 |
| 355177 | 369864 | 371558 |
| 355178 | 369865 | 371559 |
| 355179 | 369866 | 371560 |
| 359017 | 369867 | 371561 |
| 363271 | 369868 | 371562 |
| 363497 | 369869 | 371563 |
| 363498 | 369870 | 371815 |
| 363499 | 369871 | 371817 |
| 363500 | 369872 | 371818 |
| 363501 | 369877 | 371819 |
| 364854 | 369878 | 371820 |
| 366054 | 369879 | 371821 |
| 366055 | 369880 | 371822 |
| 368275 | 369881 | 371823 |
| 369599 | | 371825 |

## 2. SELECTING APPLICABLE WIRING DIAGRAMS

**a. Scope.** The internal wiring diagrams in this section cover the instrument series listed in Table 1.

TABLE 1

| Series | Description | Internal Wiring Diagram Number |
|---|---|---|
| 142<br>152 | Circular Chart | See paragraph 3 |
| 143<br>153 | Strip Chart | See paragraph 4 |
| 154 | Strip Chart<br>Relay Rack | |
| 155 | Vertical Scale<br>Precision Indicator (VSPI) | 364854 |
| 146<br>156 | Precision Indicator | See paragraph 5 |
| 158 | Blind Electro-<br>Pneumatic Transmitter | 371815 |

**b. Use of Paragraphs 3, 4, 5.** Because of the many variations possible for each model, more than one diagram may be necessary for the complete wiring of a given model. Therefore, paragraphs 3, 4, and 5 are composed of three tables as follows:

Table A - Basic Wiring Diagrams

Table B - Control Form Wiring Diagrams

Table C - Options Wiring Diagrams

Each table compares Model number (key number and seven tables) versus applicable wiring diagram.

To obtain all wiring diagrams for a given Model:

(1) Always select one drawing from Table A.

(2) If Model contains proportional or contact control form, select drawing from Table B.

(3) If Model has any Table VII optional variations which affect wiring, select appropriate drawings from Table C.

**c. Example:** To find the wiring diagrams for Model Number:

15301316- 01-01-0-021-004-01 options 010, 025

(1) From Table 1 (paragraph 1) get the proper drawing or paragraph for series 153 (paragraph 4 is specified for series 153).

(2) From paragraph 4 get the basic wiring diagram from Table A. Diagram number 369854 is specified for key number 15301316.

(3) Since Model is a contact controller, refer to Table B for control form diagram. Drawing 369866 is specified for Model 153013XX-XX-XX-X-021---- (key number and Table 4 control form).

(4) Since Table 7 options are specified in Model number, refer to Table C.
Diagram 369862 is specified for option 010.
Diagram 369870 is specified for option 025.

## 3. SERIES 142, 152 - INTERNAL WIRING DIAGRAMS

TABLE A - BASIC WIRING DIAGRAMS

| Key Number | | | | Table | | | | | | | Wiring Diagram |
|---|---|---|---|---|---|---|---|---|---|---|---|
| Partial | C | S | F | 1 | 2 | 3 | 4 | 5 | 6 | 7 | |
| 14201 | - | - | - | | | | | | | | 371548 |
| 15201 | - | - | - | | | | | | | | |
| 15202 | - | - | - | | | | | | | 019 | 371549 |
| 15215 | - | - | - | | | | | | | 154 | |
| 15214 | 1 | - | - | | | | | | | | 371550 |
| 15214 | 2 | - | - | | | | | | | | 371551 |
| 15214 | 3 | - | - | | | | | | | | |

TABLE B - CONTROL FORM WIRING DIAGRAMS

| Key Number | | | | Table | | | | | | | Wiring Diagram |
|---|---|---|---|---|---|---|---|---|---|---|---|
| Partial | C | S | F | 1 | 2 | 3 | 4 | 5 | 6 | 7 | |
| 142-- | 1 | - | - | | | | 013<br>014 | | | | 371553 |
| 152-- | 1 | - | - | | | | 015<br>131 | | | | |
| | | | | | | | 148<br>149<br>150 | | | | 371554 |
| | 3 | - | - | | | | 020<br>021 | | | | 371555 |
| | 3 | - | - | | | | 025<br>027 | | | | |
| | | | | | | | 030<br>032<br>033<br>036<br>040<br>042<br>043<br>057 | | | | 371556 |
| | | | | | | | 038<br>045 | | | | 371557 |
| | | | | | | | 211<br>246 | | | | 371558 |
| | | | | | | | 226<br>238<br>239 | | | | 371559 |

TABLE C - OPTIONS - WIRING DIAGRAMS

| Key Number | | | | Table | | | | | | | Wiring Diagram |
|---|---|---|---|---|---|---|---|---|---|---|---|
| Partial | C | S | F | 1 | 2 | 3 | 4 | 5 | 6 | 7 | |
| 142-- | - | - | - | | | | | | | 018<br>061 | 371560 |
| 152-- | - | - | - | | | | | | | 062<br>070<br>161<br>162<br>163 | |
| | | | | | | | | | | 096<br>097<br>155<br>157 | 371561 |
| | | | | | | | | | | 081<br>082<br>083<br>084<br>085<br>086<br>087<br>088 | 371562 |
| | | | | | | | | | | 151<br>152<br>153<br>154 | 371563 |

## 4. SERIES - 143, 153, 154 - INTERNAL WIRING DIAGRAMS

TABLE A - BASIC WIRING DIAGRAMS

| Key Number | | | | Table | | | | | | | Internal Wiring Diagram |
|---|---|---|---|---|---|---|---|---|---|---|---|
| Partial | C | S | F | 1 | 2 | 3 | 4 | 5 | 6 | 7 | |
| 14301 | 1 | 1 | 2,5,6 | | | | | | | | |
| | 3 | 1 | 2,5,6 | | | | | | | | |
| | 8 | 1 | 2,5,6 | | | | | | | | |
| 15301 | 1 | 1 | 2,5,6 | | | | | | | | Use 369854 Basic Internal W/D for all the instrument models shown in table on the left (Instruments without desensitizing) |
| | | 2 | 2,5,6 | | | | | | | | |
| | | 3 | - 5,6 | | | | | | | | |
| | 2 | 1 | 2,5,6 | | | | | | | | |
| | | 2 | 2,5,6 | | | | | | | | |
| | | 3 | - 5,6 | | | | | | | | |
| | 3 | 1 | 2,5,6 | | | | | | | | |
| | | 2 | 2,5,6 | | | | | | | | |
| | | 3 | - 5,6 | | | | | | | | |
| 15301 | 8 | 1 | 2,5,6 | | | | | | | | |
| 15401 | | 2 | 2 - - | | | | | | | 060 | |
| | | 2 | - 5,6 | | | | | | | | |
| | | 3 | - 5,6 | | | | | | | 060 | |
| 15303 | 1 | 1 | 2,5,6 | | | | | | | | |
| | | 2 | 2,5,6 | | | | | | | | |
| | | 3 | - 5,6 | | | | | | | | |
| | 3 | 1 | 2,5,6 | | | | | | | | |
| | | 2 | 2,5,6 | | | | | | | | |
| | | 3 | - 5,6 | | | | | | | | |
| 15303 | 8 | 1 | 2 - - | | | | | | | 060 | |
| 15305 | | 1 | - 5,6 | | | | | | | | |
| 15403 | | 2 | 2 - - | | | | | | | 060 | |
| 15405 | | 2 | - 5,6 | | | | | | | | |
| | | 3 | - 5,6 | | | | | | | 060 | |
| | | 4 | - 5,6 | | | | | | | 060 | |
| 15304 | 8 | 2 | 2 - - | | | | | | | 060 | |
| 15306 | | 2 | 2 5,6 | | | | | | | | |
| 15404 | | 3 | - 5,6 | | | | | | | 060 | |
| 15406 | | | | | | | | | | | |
| 15301 | 8 | 2 | 2 - - | | | | | | | | |
| 15401 | | 3 | - 5,6 | | | | | | | | Use 369855 Basic Internal W/D (Instruments with desensitizing) |
| 15303 | 8 | 1 | 2 - - | | | | | | | | |
| 15305 | | 2 | 2 - - | | | | | | | | |
| 15403 | | 3 | - 5,6 | | | | | | | | |
| 15405 | | 4 | - 5,6 | | | | | | | | |
| 15304 | 8 | 2 | 2 - - | | | | | | | | |
| 15306 | | | | | | | | | | | |
| 15404 | | 3 | - 5,6 | | | | | | | | |
| 15406 | | | | | | | | | | | |
| 15301 | 8 | 4 | - 5,6 | | | | | | | 060 | 369856(Without desensitizing) |
| 15401 | | 5 | - 5,6 | | | | | | | | |
| 15301 | 8 | 4 | - 5,6 | | | | | | | | 369857 (With desensitizing) |
| 15401 | 8 | 4 | - 5,6 | | | | | | | | 369858 (With desensitizing) |
| 15301 | 8 | 7 | - - 6 | | | | | | | | 366054 |
| 15401 | | 7 | - - 6 | | | | | | | 019 | 366055 |
| 15302 | 8 | 1 | - 5,6 | | | | | | | | |
| 15402 | | 2 | - 5,6 | | | | | | | | 369859 |
| | | 3 | - 5,6 | | | | | | | | |
| | | 4 | - 5,6 | | | | | | | | |
| | | 5 | - 5,6 | | | | | | | | |
| 15307 | 8 | 5 | - 5,6 | | | | | | | | 368275 |
| 15407 | | | - 5,6 | | | | | | | 009 | 369599 |
| 15308 | 8 | 1 | - 5,6 | | | | | | | | |
| | | 2 | - 5,6 | | | | | | | | 369860 |
| | | 3 | - 5,6 | | | | | | | | |
| | | 4 | - 5,6 | | | | | | | | |
| 15309 | 8 | 3 | - 5,6 | | | | | | | | |
| | | 4 | - 5,6 | | | | | | | | 369861 |

TABLE B - CONTROL FORM WIRING DIAGRAMS

| Key Number | | | | Table | | | | Wiring Diagram |
|---|---|---|---|---|---|---|---|---|
| Partial | C | S | F | 1 2 3 | 4 | 5 6 | 7 | |
| 14301<br>15301 | 1 | - | - | | 013 | | | 369872 |
| | | | | | 015 | | | |
| | | | | | 014 | | | 369871 |
| | | | | | 131 | | | 369867 |
| | | | | | 148 | | | 369869 |
| | | | | | 149 | | | |
| | | | | | 150 | | | |
| 15301 | 1 | - | - | | 143 | | | 369868 |
| | | | | | 144 | | | |
| 14301 | 3 | - | - | | 021 | | | 369866 |
| 15301 | | - | - | | 025 | | | 369865 |
| | | | | | 031 | | | |
| | | | | | 020 | | | 369881 |
| | | | | | 027 | | | |
| | | | | | 024 | | | 369880 |
| | | | | | 028 | | | |
| | | | | | 036 | | | |
| | | | | | 032 | | | 369879 |
| | | | | | 033 | | | |
| | | | | | 043 | | | |
| | | | | | 037 | | | 369877 |
| | | | | | 040 | | | 369878 |
| | | | | | 042 | | | |
| 15303 | 1 | - | - | | 013 | | 094 | 354793 |
| | | | | | 015 | | 094 | |
| | | | | | 113 | | 093 | 354787 |
| | | | | | 115 | | 093 | |
| | | | | | 131 | | 093 | 354794 |
| | | | | | 213 | | 093 | 355177 |
| | | | | | 215 | | 093 | |
| | | | | | 216 | | 093 | 355176 |
| | | | | | 217 | | 094 | 355178 |
| 15303 | 3 | - | - | | 021 | | 095 | 354788 |
| | | | | | 029 | | 095 | 354789 |
| | | | | | 052 | | 095 | 354792 |
| | | | | | 121 | | 095 | 354786 |
| | | | | | 122 | | 095 | 359017 |
| | | | | | 128 | | 095 | 354790 (Control on 2 Records) |
| | | | | | 128 | | 095 | 354791 (Control on 2 Records) |
| | | | | | 228 | | 095 | 355179 |

TABLE C - OPTIONS - WIRING DIAGRAMS

| Key Number | | | | Table | | Wiring Diagram |
|---|---|---|---|---|---|---|
| Partial | C | S | F | 1 2 3 4 5 6 | 7 | |
| 14301<br>15301<br>15303<br>15401<br>15403 | - | - | - | | 090 | 369862 |
| | | | | | 010 | |
| | | | | | 011 | |
| | | | | | 012 | |
| | | | | | 013 | 369863 |
| | | | | | 018 | 363501 |
| | | | | | 024 | |
| | | | | | 019 | 369870 |
| | | | | | 025 | |
| | | | | | 026 thru 037 | 363499 |
| | | | | | 061 | 363271 |
| | | | | | 062 | |
| | | | | | 091 | 369864 |
| | | | | | 094 | |
| | | | | | 095 | |
| | | | | | 092 | 363498 |
| | | | | | 097 | |
| | | | | | 096 | 363497 |
| | | | | | - | 363500 Input Filter Capacitors |

## 5. SERIES 146 and 156 - INTERNAL WIRING DIAGRAMS

TABLE A - BASIC WIRING DIAGRAMS

| Key Number | | | | Table | | Wiring Diagram |
|---|---|---|---|---|---|---|
| Partial | C | S | F | 1 2 3 4 5 6 | 7 | |
| 14601 | 1 | - | - | | | 371825 |
| 14601 | 3 | - | - | | | |
| 15601 | 1 | - | - | | 175 | 371817 |
| 15601 | 3 | - | - | | | |
| 15601 | 8 | - | - | | | 371817 |
| 15618 | 8 | - | - | | 019 | 371825 |

TABLE B - CONTROL FORM WIRING DIAGRAMS

| Key Number | | | | Table | | | | | | | Wiring Diagram |
|---|---|---|---|---|---|---|---|---|---|---|---|
| Partial | C | S | F | 1 | 2 | 3 | 4 | 5 | 6 | 7 | |
| 14601<br>15601 | 1<br>1 | -<br>- | -<br>- | | | | 013<br>014<br>131 | | | | 371818 |
| | | | | | | | 148<br>149<br>150 | | | | 371819 |
| | 3<br>3 | -<br>- | -<br>- | | | | 021<br>023<br>031<br>061<br>064 | | | | 371820 |
| | | | | | | | 030<br>033<br>040<br>041<br>042<br>043<br>050 | | | | 371821 |
| | | | | | | | 047<br>062<br>063<br>065 | | | | 371822 |

TABLE C - OPTIONS - WIRING DIAGRAMS

| Key Number | | | | Table | | | | | | | Wiring Diagram |
|---|---|---|---|---|---|---|---|---|---|---|---|
| Partial | C | S | F | 1 | 2 | 3 | 4 | 5 | 6 | 7 | |
| 14601<br>15601<br>15618 | -<br>-<br>- | -<br>-<br>- | -<br>-<br>- | | | | | | | 018<br>097<br>174 | 371823 |

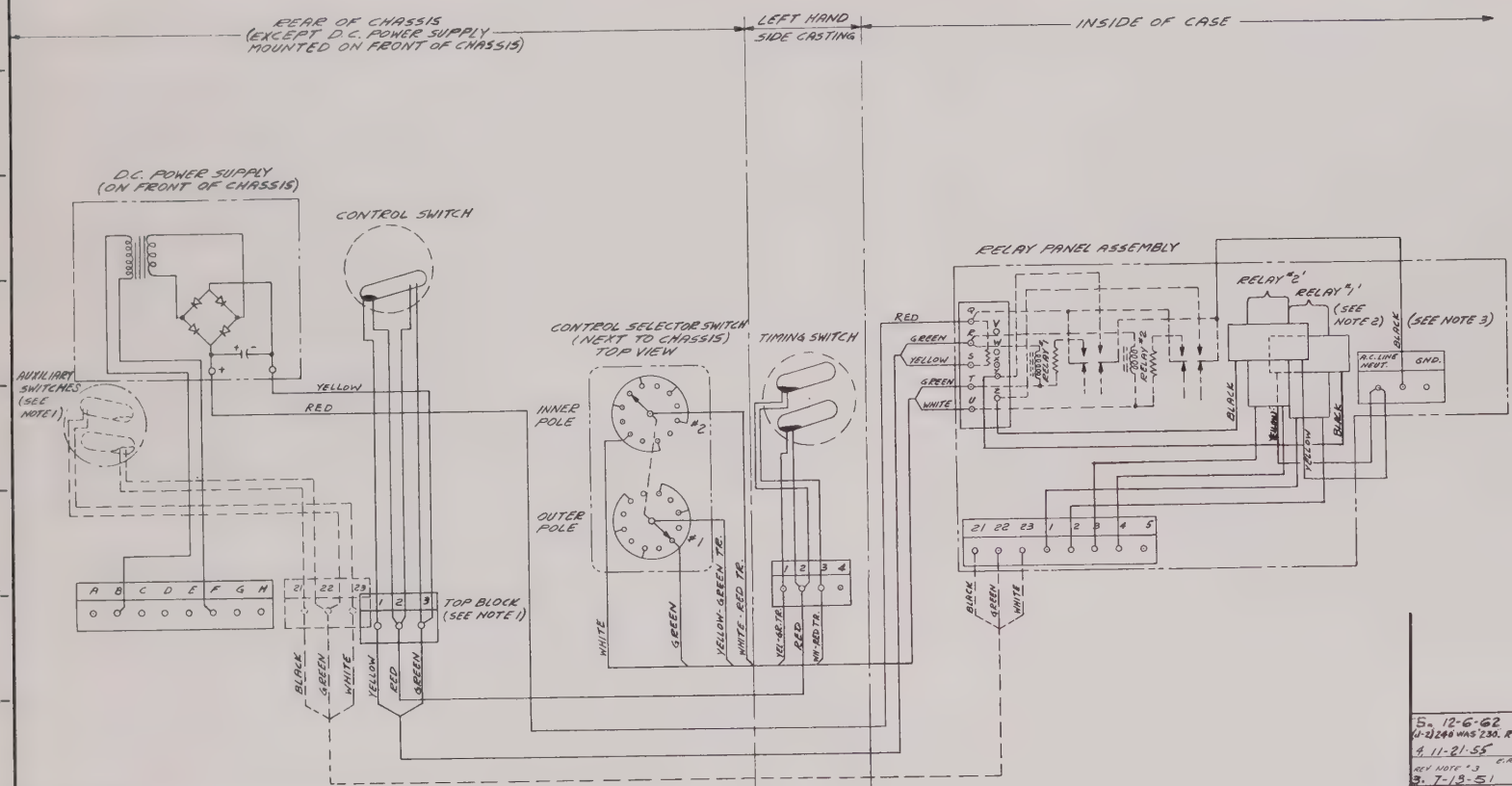


NOTE:

1. THIS PORTION OF CIRCUIT SUPPLIED ONLY ON INSTRUMENTS WITH BACK-SET AUXILIARY SWITCHES. AUXILIARY SWITCH TERMINAL BLOCK MOUNTED AGAINST CHASSIS UNDER CONTROL SWITCH TERMINAL BLOCK.
2. MERCURY-PLUNGER RELAY #1' IS MOUNTED BENEATH RELAY #2'. RELAYS 1' AND 2' ARE CONTROLLED BY RELAY CIRCUITS #1 AND #2 RESPECTIVELY.
3. WHEN PROVIDED FOR 240 V. OPERATION, REFER TO 353667.

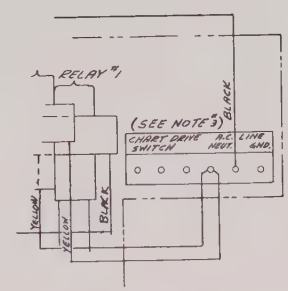


ARRANGEMENT FOR INSTRUMENTS
NOT PROVIDED WITH
POWER SWITCHES

5. 12-6-62 2223
(J-2) 240 WAS 230. REVISED TITLE
4. 11-21-55 E.R. 279-1
REV NOTE #3
3. 7-13-51 E.R. 364-1
CHANGED CONN. ON TERM. BLOCK IN REAR OF CASE FROM 4 & 5, TO 3 & 4.
2. 3-9-50 E.R. 4586-49
DWG WAS 20-X-07-MT
"FORM 121" IN TITLE WAS "FORM B"
1. 10/20/49 5
FORM NO. F-2145

ISSUE NO.

| | | | | |
|---|---|---|---|---|
| TOKYO | ✓ | Bronx | ✓ | |
| M-H | | | | |
| TORONTO | ✓ | | | |
| [illegible] | | | 4586 | |
| REPRODUCTION LOCATED AT | | | JOB NO. | USED ON |

LIMITS—ON DIMENSIONS WHERE LIMITS ARE NOT SHOWN USE THE FOLLOWING:—
ON THREE PLACE DECIMALS ± .002
ON ALL OTHER LINEAR DIMENSIONS ± .010
ANGULAR DIMENSIONS ± 1°

| PROJ. ENGR. | DRAWN | CHECKED | APPROVED |
|---|---|---|---|
| M.J.S. | J.J.C. | | |

WIRING DIAGRAM
OF CONTROL CIRCUIT TYPE
153033 WITH CONTROL FORM
121, & OPTIONAL VARIATION
095

MINNEAPOLIS-HONEYWELL REG. CO.
BROWN INSTRUMENTS DIVISION
PHILADELPHIA, PA., U.S.A. MP

| SCALE | DRAWING NO. |
|---|---|
| 4" | 354786 |
| DATE 10-7-49 | |

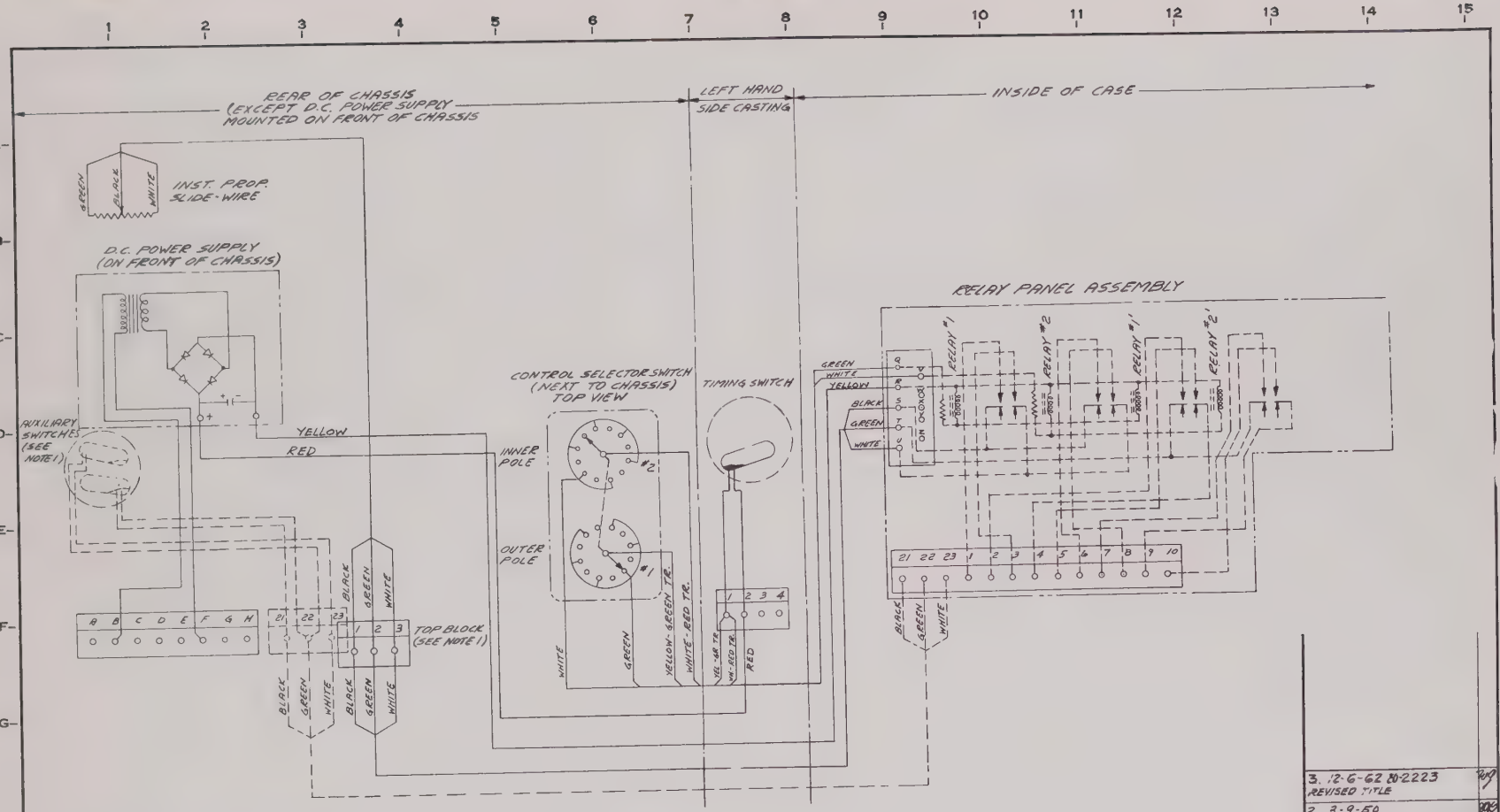


NOTE:

1. THIS PORTION OF CIRCUIT SUPPLIED ONLY ON INSTRUMENTS WITH BACK-SET AUXILIARY SWITCHES. AUXILIARY SWITCH TERMINAL BLOCK MOUNTED AGAINST CHASSIS UNDER CONTROL SWITCH TERMINAL BLOCK.

3. 12-6-62 80-2223 REVISED TITLE

2. 3-9-50

E.R. 4586-99

DW'G WAS 20-X-07-MU

"FORM 113 & 115" IN TITLE WAS "FORM H & K"

1. 10/20/49 FORM NO. F-2540

S

ISSUE NO.

| TORIG | ✓ | REVISED | ✓ |
|---|---|---|---|
| M-M | | | |
| TORONTO | ✓ | | |
| [illegible] | | 4586 | |
| REPRODUCTION LOCATED AT | | JOB NO. | USED ON |

LIMITS—ON DIMENSIONS WHERE LIMITS ARE NOT SHOWN USE THE FOLLOWING:—
ON THREE PLACE DECIMALS ±.002
ON ALL OTHER LINEAR DIMENSIONS ± .010
ANGULAR DIMENSIONS ± 1°

| PROJ. ENGR. | DRAWN | CHECKED | APPROVED |
|---|---|---|---|
| NJS | J.J.C. | | |

WIRING DIAGRAM
OF CONTROL CIRCUIT TYPE 153031
WITH CONTROL FORM 113 OR 115
AND OPTIONAL VARIATION .093

MINNEAPOLIS-HONEYWELL REG. CO.
BROWN INSTRUMENTS DIVISION
PHILADELPHIA, PA., U. S. A.

MP

SCALE: JP

DATE: 10-11-49

DRAWING NO. 354787

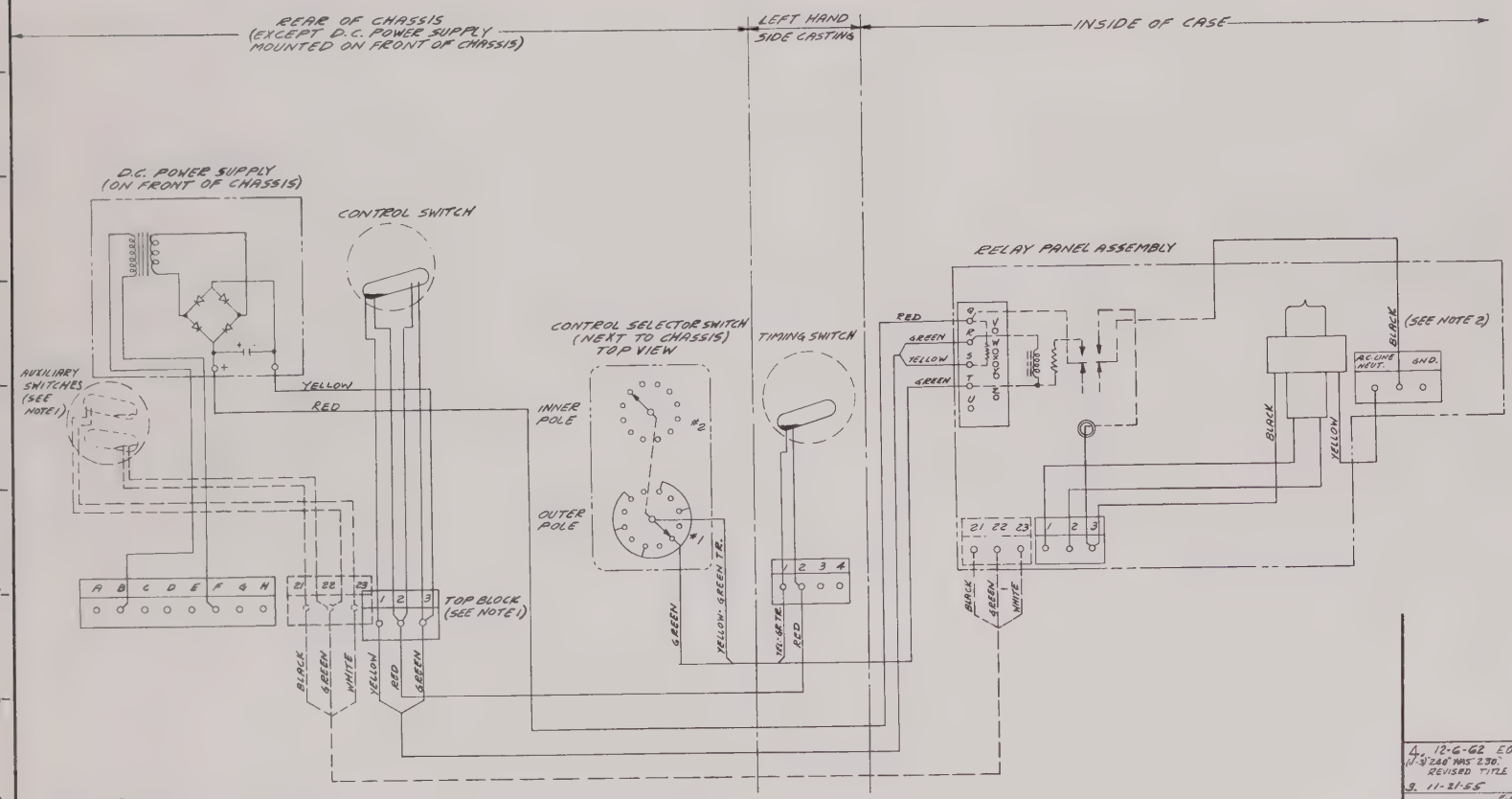


NOTE:

1. THIS PORTION OF CIRCUIT SUPPLIED ONLY ON INSTRUMENTS WITH BACK-SET AUXILIARY SWITCHES. AUXILIARY SWITCH TERMINAL BLOCK MOUNTED AGAINST CHASSIS UNDER CONTROL SWITCH TERMINAL BLOCK.

2. WHEN PROVIDED FOR 240 V. OPERATION, REFER TO 353667

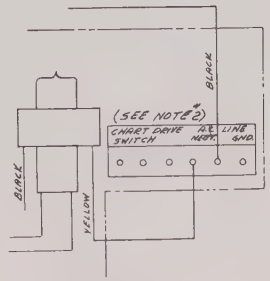


ARRANGEMENT FOR INSTRUMENTS
NOT PROVIDED WITH
POWER SWITCHES

4. 12-6-62 EO-2223
(1-3) "240" WAS "230."
REVISED TITLE
3. 11-21-55
REV. NOTE #2 E.R. 879-1
2. 3-9-50
C.R. 4586-49
DWG WAS 20-X-07-MV
"FORM 21" IN TITLE WAS "FORM A"
1. 10/20/49
FORM NO. P-4145
S
MP.

ISSUE NO.

| | | | | |
|---|---|---|---|---|
| TOKYO | ✓ | NEW HOUSE | ✓ | |
| M-H | | | | |
| TORONTO | ✓ | | | |
| LONDON | | | 4586 | |
| REPRODUCTION LOCATED AT | | | JOB NOS. | USED ON |

LIMITS—ON DIMENSIONS WHERE LIMITS ARE NOT SHOWN USE THE FOLLOWING:—
ON THREE PLACE DECIMALS ± .002
ON ALL OTHER LINEAR DIMENSIONS ± .010
ANGULAR DIMENSIONS ± 1°

| PROJ. ENGR. | DRAWN | CHECKED | APPROVED |
|---|---|---|---|
| N.J.S. | J.J.C. | | |

WIRING DIAGRAM
OF CONTROL CIRCUIT TYPE
153033 WITH CONTROL FORM 21
AND OPTIONAL VARIATION 095

MINNEAPOLIS-HONEYWELL REG. CO.
BROWN INSTRUMENTS DIVISION
PHILADELPHIA, PA., U. S. A.
MP

SCALE: NP
DATE: 10-11-49
DRAWING NO. 354788

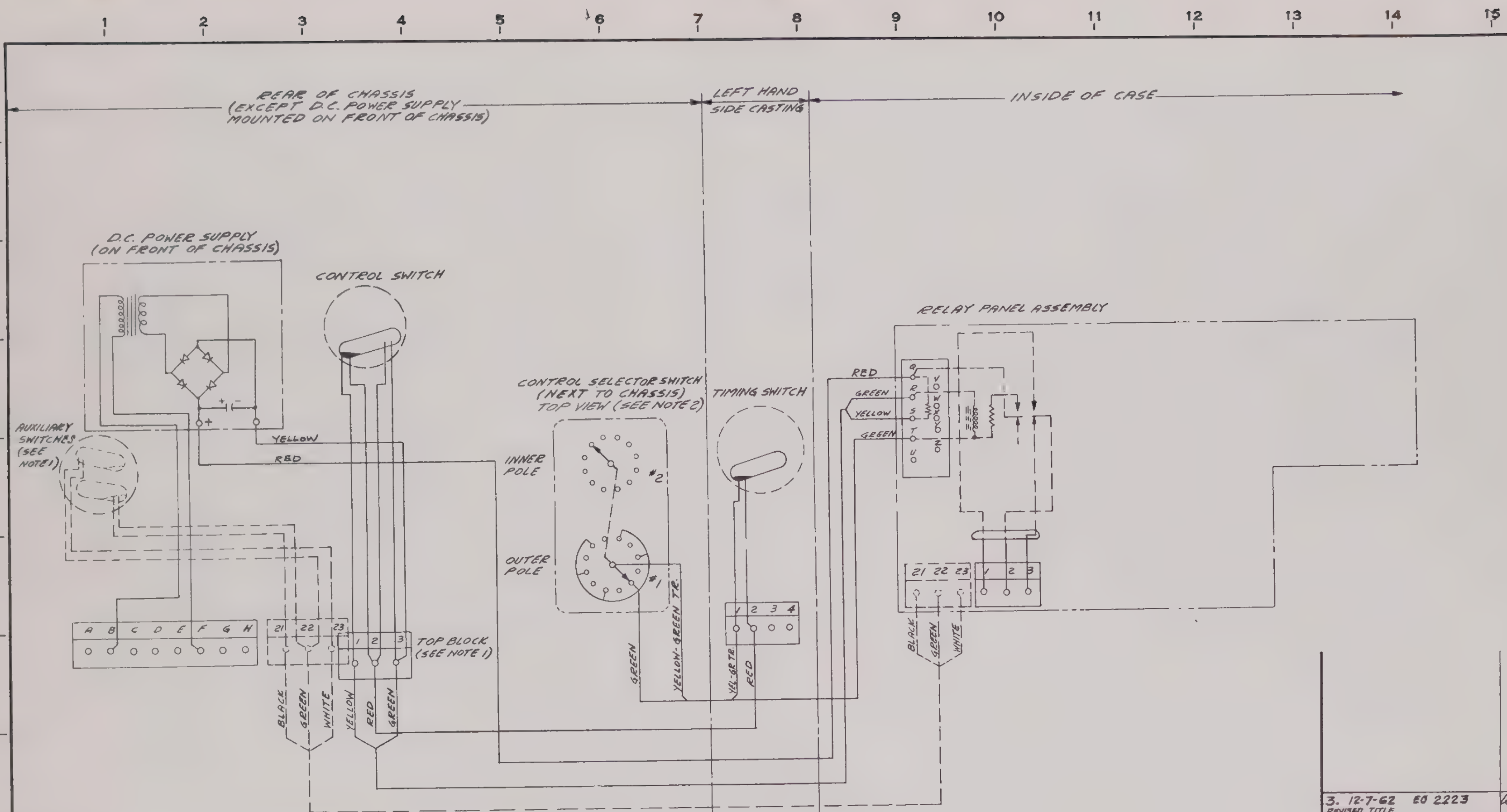


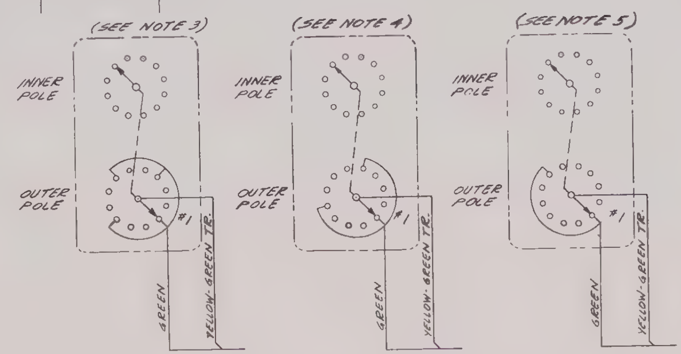


NOTE:

1. THIS PORTION OF CIRCUIT SUPPLIED ONLY ON INSTRUMENTS WITH BACK-SET AUXILIARY SWITCHES. AUXILIARY SWITCH TERMINAL BLOCK MOUNTED AGAINST CHASSIS UNDER CONTROL SWITCH TERMINAL BLOCK.
2. INTERNAL WIRING OF CONTROL SELECTOR SWITCH FOR 2 RECORD INSTRUMENT HAVING CONTROL ON FIRST RECORD OR FOR 3,4,&6 RECORD INST. WITH SPECIAL PRINTING SEQUENCE.
3. INTERNAL WIRING OF CONTROL SELECTOR SWITCH FOR 3 RECORD INSTRUMENT HAVING CONTROL ON FIRST RECORD.
4. INTERNAL WIRING OF CONTROL SELECTOR SWITCH FOR 4 RECORD INSTRUMENT HAVING CONTROL ON FIRST RECORD
5. INTERNAL WIRING OF CONTROL SELECTOR SWITCH FOR 6 RECORD INSTRUMENT HAVING CONTROL ON FIRST RECORD.

3. 12-7-62 EO 2223
REVISED TITLE
2. 3-9-50
E.R. 4586-49
DWG WAS 20-X-07-MW
ADDED "OR FOR 3, 4 & 6 ETC TO NOTE 2
"FORM 29" IN TITLE WAS "FORM C"
1. 10/20/49
FORM NO. F-2165

ISSUE NO. 5

| | | |
|---|---|---|
| TOKYO | ✓ | ✓ |
| M-H | | |
| TORONTO | ✓ | |

REPRODUCTION LOCATED AT | JOB NOS. 4586 | USED ON

LIMITS—ON DIMENSIONS WHERE LIMITS ARE NOT SHOWN USE THE FOLLOWING:— ON THREE PLACE DECIMALS ± .002 ON ALL OTHER LINEAR DIMENSIONS ± .010 ANGULAR DIMENSIONS ± 1°

| PROJ. ENGR. | DRAWN | CHECKED | APPROVED |
|---|---|---|---|
| N.J.S. | J.J.C. | | |

WIRING DIAGRAM
OF CONTROL CIRCUIT TYPE 153033 WITH CONTROL FORM 29 AND OPTIONAL VARIATION 095

MINNEAPOLIS-HONEYWELL REG. CO.
BROWN INSTRUMENTS DIVISION
PHILADELPHIA, PA., U.S.A.

SCALE: N | DATE: 10-12-49 | DRAWING NO. 354789

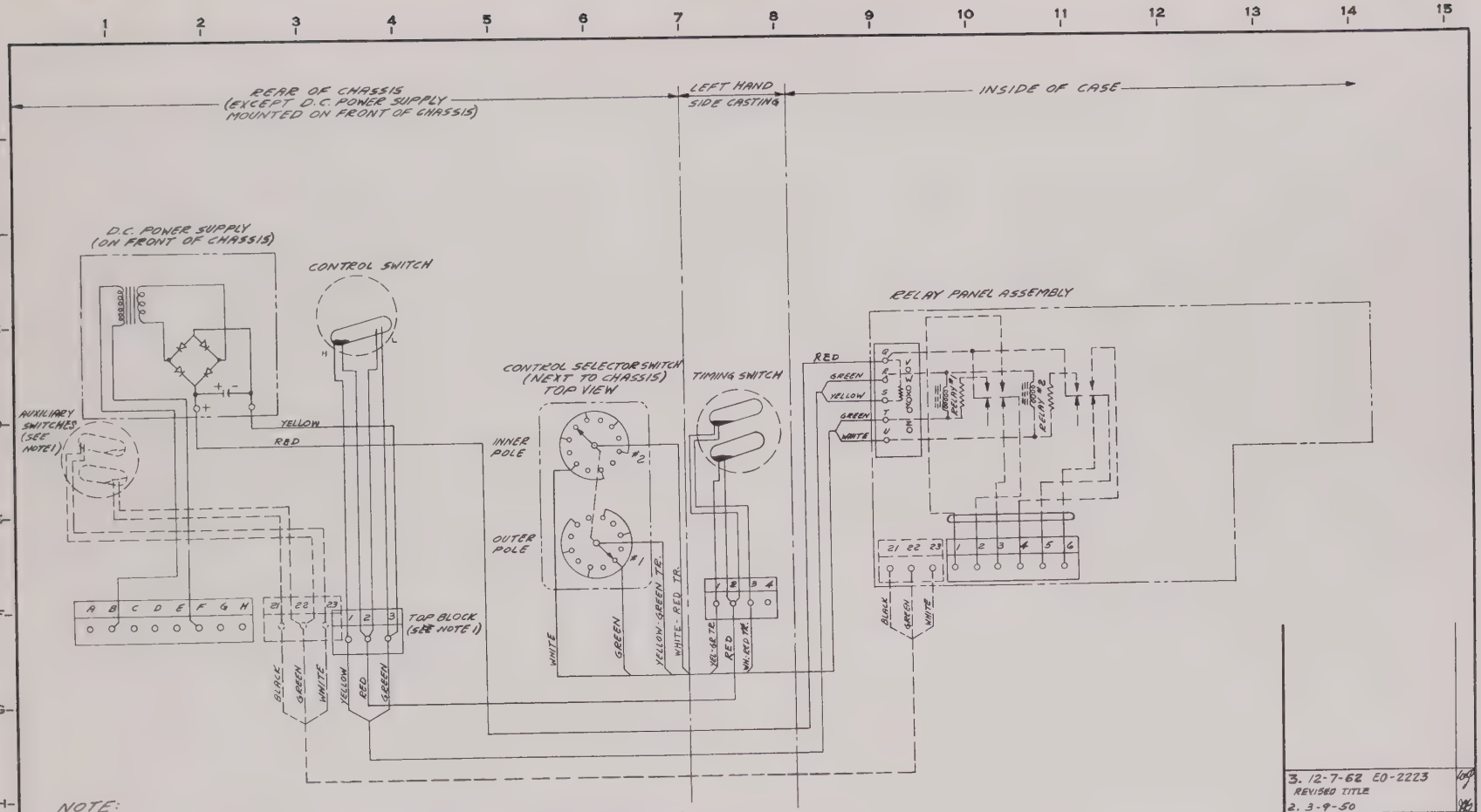


NOTE:

1. THIS PORTION OF CIRCUIT SUPPLIED ONLY ON INSTRUMENTS WITH BACK-SET AUXILIARY SWITCHES. AUXILIARY SWITCH TERMINAL BLOCK MOUNTED AGAINST CHASSIS UNDER CONTROL SWITCH TERMINAL BLOCK.

3. 12-7-62 EO-2223
REVISED TITLE
2. 3-9-50
DWG WAS 20-X-07-MX
"FORM 12B" IN TITLE WAS "FORM D"
1. 10/20/49
FORM NO. F-2145

ISSUE NO.

| | | | | |
|---|---|---|---|---|
| TOKYO N-K | ✓ | REVISED | ✓ | 3 |
| TORONTO | ✓ | | | |
| | | | | 1586 |
| REPRODUCTION LOCATED AT | | | JOB NOS. | USED ON |

LIMITS—ON DIMENSIONS WHERE LIMITS ARE NOT SHOWN USE THE FOLLOWING:—
ON THREE PLACE DECIMALS ± .002
ON ALL OTHER LINEAR DIMENSIONS ± .010
ANGULAR DIMENSIONS ± 1°

| PROJ. ENGR. | DRAWN | CHECKED | APPROVED |
|---|---|---|---|
| W. J. | J.J.C. | | |

# WIRING DIAGRAM OF CONTROL CIRCUIT TYPE 153033 WITH CONTROL FORM 12B FOR 2 RECORDS & OPTIONAL VARIATION 095

MINNEAPOLIS-HONEYWELL REG. CO.
BROWN INSTRUMENTS DIVISION
PHILADELPHIA, PA. U.S.A.

SCALE: —
DATE: 10-13-49
DRAWING NO. 354790

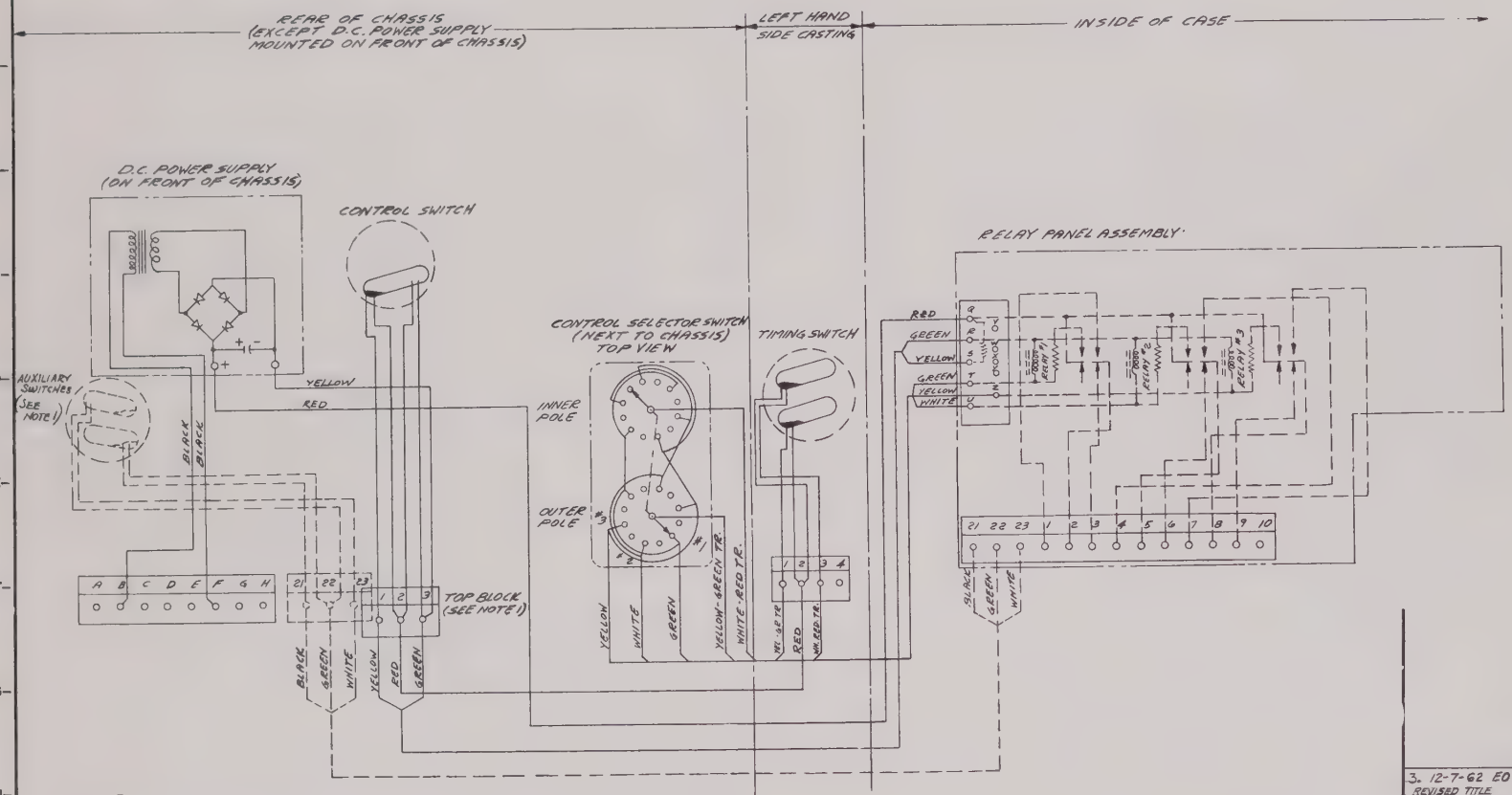


NOTE:

1. THIS PORTION OF CIRCUIT SUPPLIED ONLY ON INSTRUMENTS WITH BACKSET AUXILIARY SWITCHES. AUXILIARY SWITCH TERMINAL BLOCK MOUNTED AGAINST CHASSIS UNDER CONTROL SWITCH TERMINAL BLOCK.

3. 12-7-62 EO-2223
REVISED TITLE

2. 3-9-50
E.R. 4586-49
D'WG WAS 20-X-07-MY
"FORM 128" IN TITLE WAS "FORM D"

1. 10/20/49
FORM NO. F-2148

ISSUE NO.

| | | | | |
|---|---|---|---|---|
| TOKYO M-H | ✓ | NEW HOUSE | ✓ | |
| TORONTO | ✓ | | | |
| | | | 4586 | |
| REPRODUCTION LOCATED AT | | | JOB NOS. | USED ON |

LIMITS—ON DIMENSIONS WHERE LIMITS ARE NOT SHOWN USE THE FOLLOWING:—
ON THREE PLACE DECIMALS ± .002
ON ALL OTHER LINEAR DIMENSIONS ± .010
ANGULAR DIMENSIONS ± 1°

| PROJ. ENGR. | DRAWN | CHECKED | APPROVED |
|---|---|---|---|
| N.J.S. | J.J.C. | | |

WIRING DIAGRAM
OF CONTROL CIRCUIT TYPE 153033
WITH CONTROL FORM 128 FOR 3
RECORDS & OPTIONAL VARIATION 095

MINNEAPOLIS-HONEYWELL REG. CO.
BROWN INSTRUMENTS DIVISION
PHILADELPHIA, PA., U.S.A.

SCALE
DATE 10-14-49

DRAWING NO. 354791

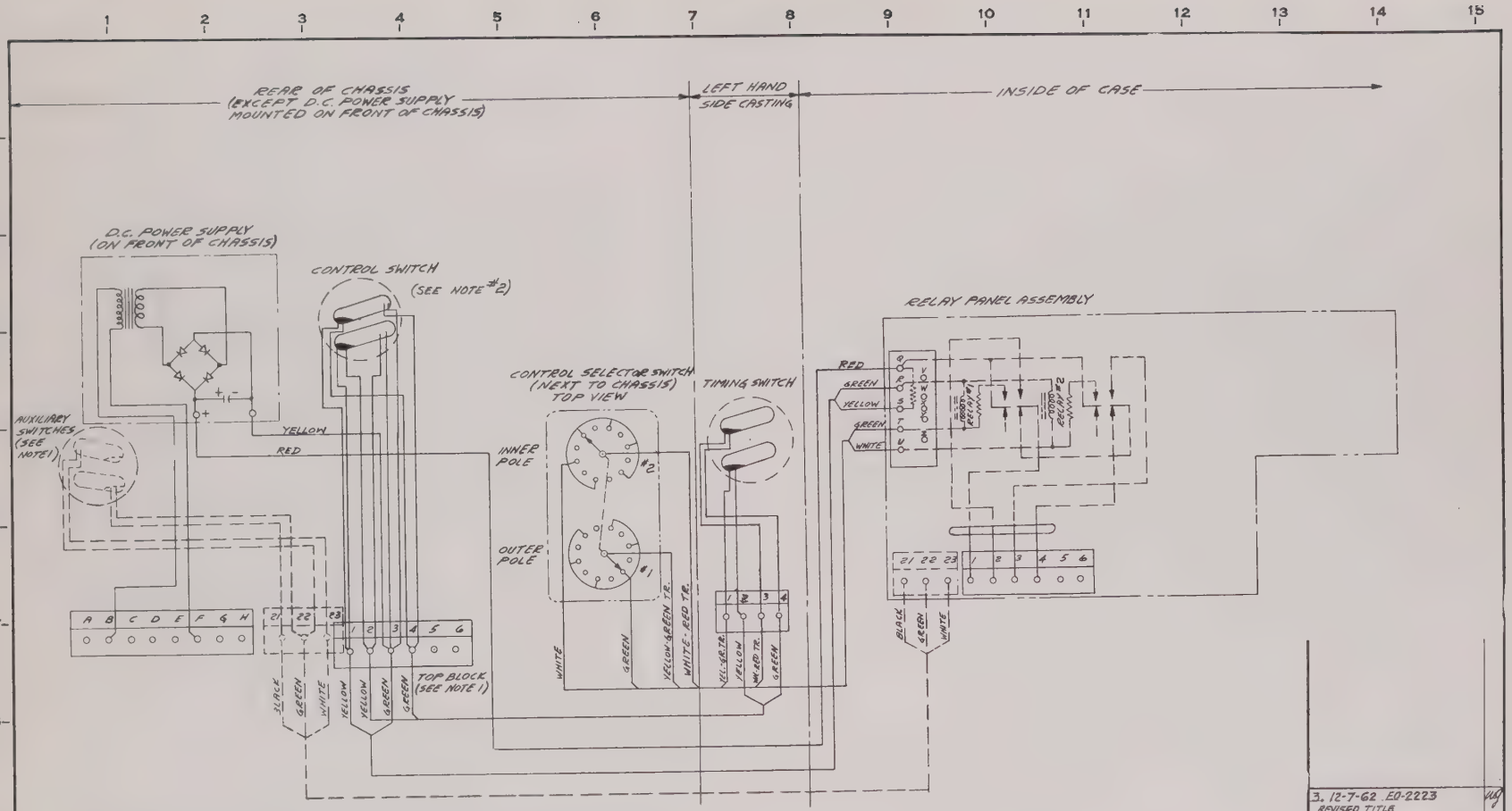


NOTE:

1. THIS PORTION OF CIRCUIT SUPPLIED ONLY ON INSTRUMENTS WITH BACK-SET AUXILIARY SWITCHES. AUXILIARY SWITCH TERMINAL BLOCK MOUNTED AGAINST CHASSIS UNDER CONTROL SWITCH TERMINAL BLOCK.
2. SET ANGLE ON MERCURY SWITCHES SO THAT THE LOWER MERCURY SWITCH TILTS TO THE RIGHT BEFORE THE UPPER MERCURY SWITCH TILTS TO THE RIGHT.

3. 12-7-62 E0-2223 REVISED TITLE
2. 3-9-50 E.R. 4586-49
DW'G WAS 20-X-07-M2
"FORM 52" IN TITLE WAS "FORM F"
1. 10/20/49
FORM NO. F-8148

ISSUE NO.

| | | | | |
|---|---|---|---|---|
| TOKYO N-H | ✓ | NEWHOUSE | ✓ | |
| TORONTO | ✓ | | | |
| | | | 4586 | |
| REPRODUCTION LOCATED AT | | | JOB NOS | USED ON |

LIMITS—ON DIMENSIONS WHERE LIMITS ARE NOT SHOWN USE THE FOLLOWING:—
ON THREE PLACE DECIMALS ± .002
ON ALL OTHER LINEAR DIMENSIONS ± .010
ANGULAR DIMENSIONS ± 1°

| PROJ. ENGR. | DRAWN | CHECKED | APPROVED |
|---|---|---|---|
| A.J.S. | J-J.C. | | |

# WIRING DIAGRAM OF CONTROL CIRCUIT TYPE 153033 WITH CONTROL FORM 52 & OPTIONAL VARIATION 095

MINNEAPOLIS-HONEYWELL REG. CO.
BROWN INSTRUMENTS DIVISION
PHILADELPHIA, PA., U.S.A.

SCALE —
DATE 10-17-49
DRAWING NO. 354792

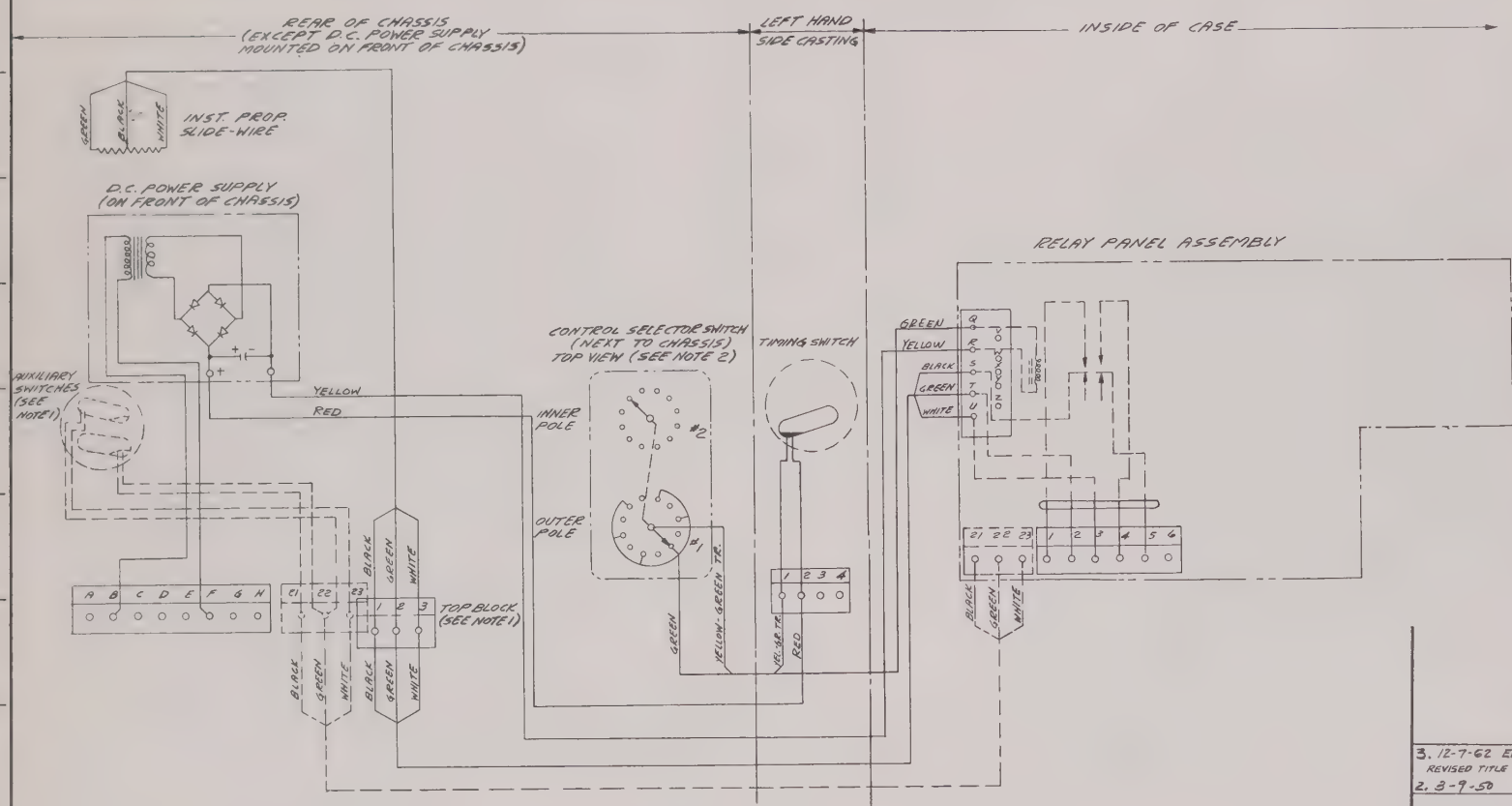


NOTE:

1. THIS PORTION OF CIRCUIT SUPPLIED ONLY ON INSTRUMENTS WITH BACK-SET AUXILIARY SWITCHES. AUXILIARY SWITCH TERMINAL BLOCK MOUNTED AGAINST CHASSIS UNDER PROPORTIONING RESISTOR TERMINAL BLOCK.
2. INTERNAL WIRING OF CONTROL SELECTOR SWITCH SHOWN FOR 2 RECORD INSTRUMENT HAVING CONTROL ON FIRST RECORD. OR FOR 3 RECORD INST. WITH SPECIAL PRINTING SEQUENCE OF 1, 2, 1, 3 ETC.
3. INTERNAL WIRING OF CONTROL SELECTOR SWITCH SHOWN FOR 3 RECORD INSTRUMENT WITH STANDARD PRINTING SEQUENCE HAVING CONTROL ON FIRST RECORD

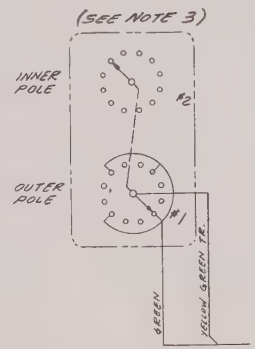


3. 12-7-62 EO-2223
REVISED TITLE
2. 3-9-50
E.R. 4586-49
DWG WAS 20-X-07-NA
ADDED "WITH ST'D PRINTING SEQ." TO NOTE 3
ADDED "OR FOR 3 REC." ETC TO NOTE 2
"FORM 13 & 15" IN TITLE WAS "FORM 6 & 1"
1. 10/20/'49
FORM NO. F-3148
S

ISSUE NO.

| | | | |
|---|---|---|---|
| TOKYO M-H | ✓ | NEWHOUSE | ✓ |
| TORONTO | ✓ | | |
| | | 4586 | |

REPRODUCTION LOCATED AT — JOB NOS. — USED ON

LIMITS—ON DIMENSIONS WHERE LIMITS ARE NOT SHOWN USE THE FOLLOWING
ON THREE PLACE DECIMALS ± .002
ON ALL OTHER LINEAR DIMENSIONS ± .010
ANGULAR DIMENSIONS ± 1°

| PROJ. ENGR | DRAWN | CHECKED | APPROVED |
|---|---|---|---|
| NJS | J.J.C. | | |

WIRING DIAGRAM
OF CONTROL CIRCUIT TYPE 153031
WITH CONTROL FORM 13 OR 15 AND
OPTIONAL VARIATION 094

MINNEAPOLIS-HONEYWELL REG. CO.
BROWN INSTRUMENTS DIVISION
PHILADELPHIA, PA., U.S.A.

SCALE NP — DATE 10-17-49 — DRAWING NO. 354793

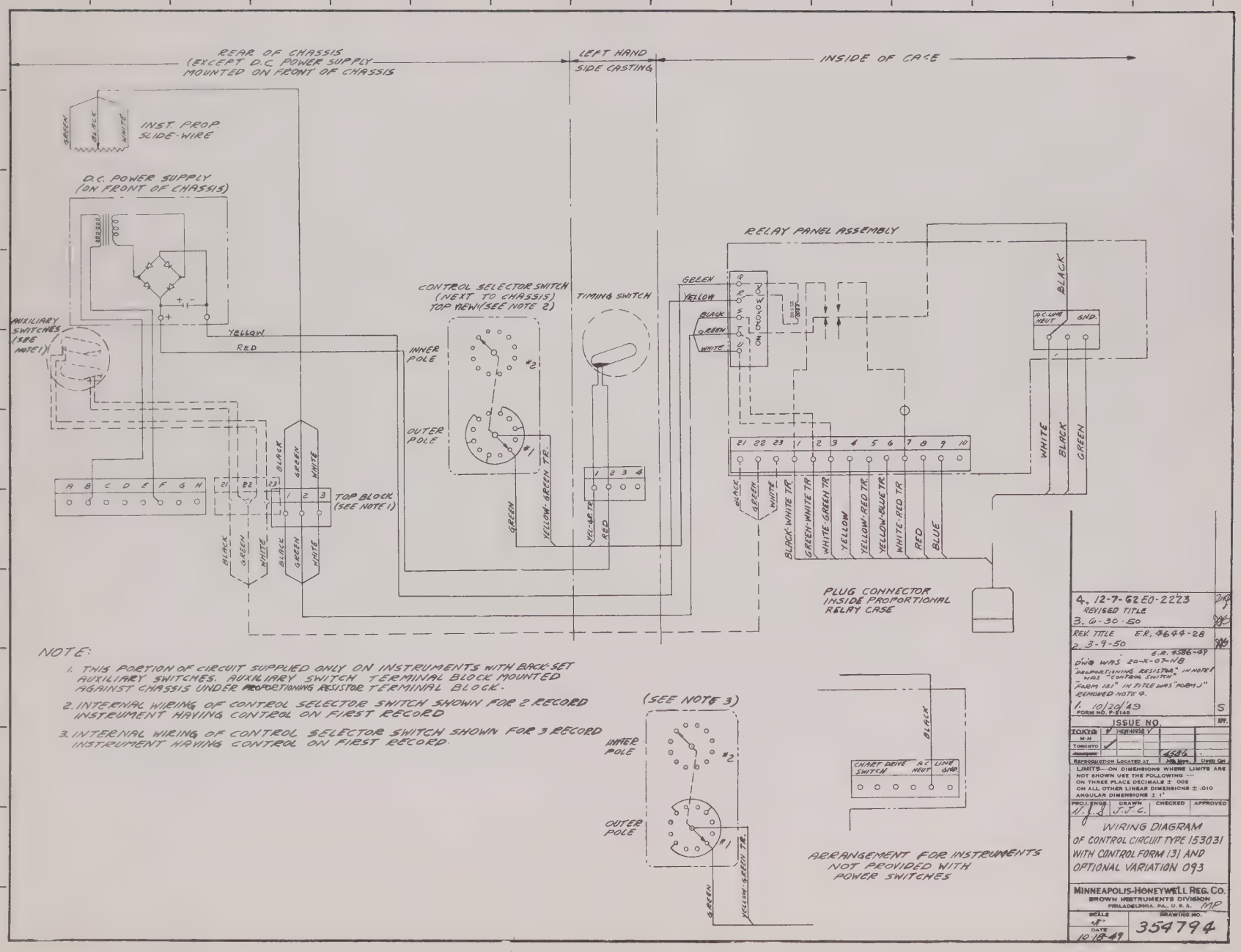


NOTE:

1. THIS PORTION OF CIRCUIT SUPPLIED ONLY ON INSTRUMENTS WITH BACK-SET AUXILIARY SWITCHES. AUXILIARY SWITCH TERMINAL BLOCK MOUNTED AGAINST CHASSIS UNDER PROPORTIONING RESISTOR TERMINAL BLOCK.
2. INTERNAL WIRING OF CONTROL SELECTOR SWITCH SHOWN FOR 2 RECORD INSTRUMENT HAVING CONTROL ON FIRST RECORD
3. INTERNAL WIRING OF CONTROL SELECTOR SWITCH SHOWN FOR 3 RECORD INSTRUMENT HAVING CONTROL ON FIRST RECORD.

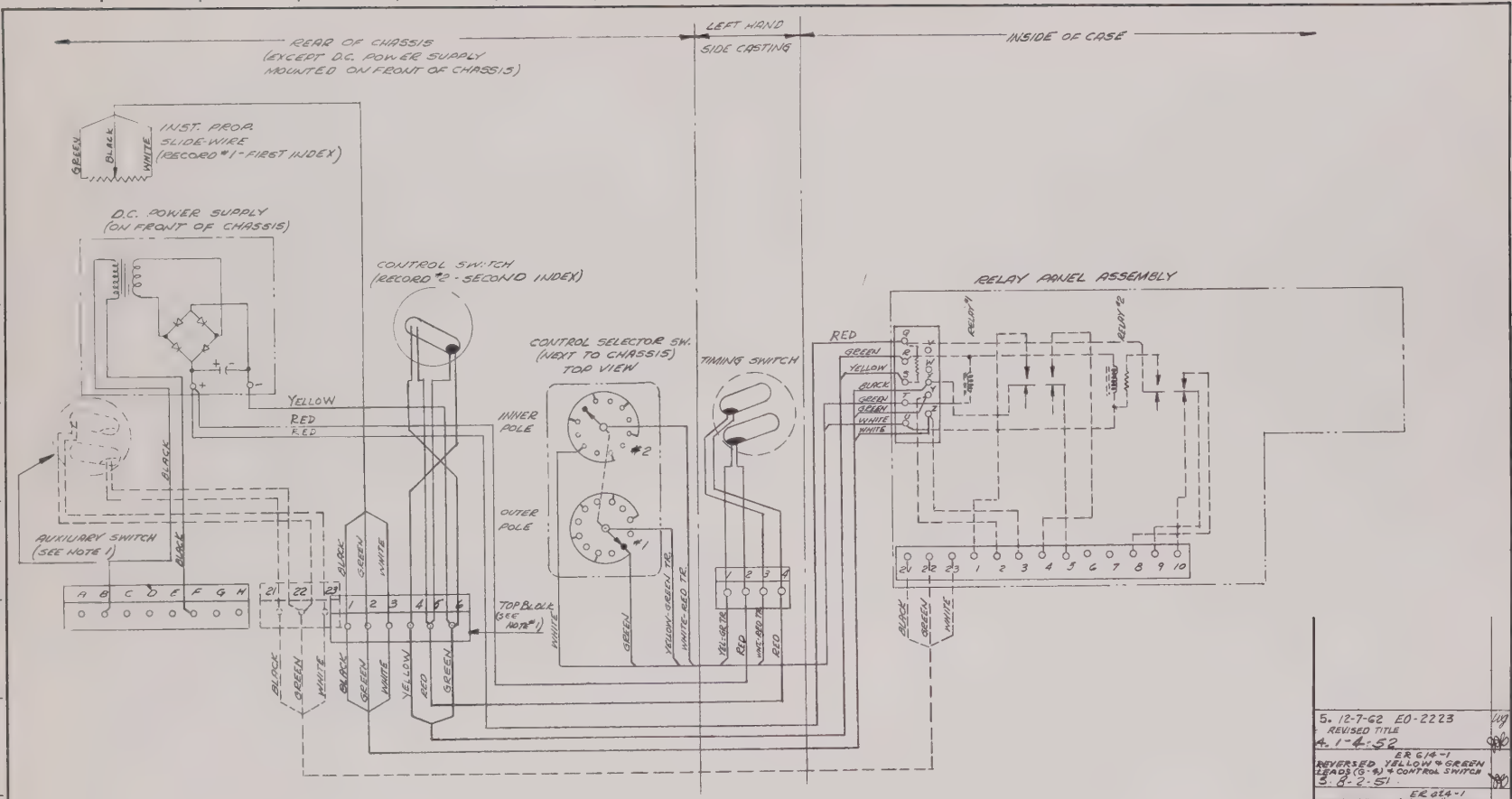


NOTE:-

1. THIS PORTION OF CIRCUIT SUPPLIED ONLY ON INSTRUMENTS. WITH BACK-SET AUXILIARY SWITCHES. AUXILIARY SWITCH TERMINAL BLOCK MOUNTED AGAINST CHASSIS UNDER CONTROL SWITCH TERMINAL BLOCK.

5. 12-7-62 EO-2223
REVISED TITLE
4. 1-4-52

ER 614-1
REVERSED YELLOW & GREEN LEADS (G-4) & CONTROL SWITCH
3. 8-2-51

ER 614-1
REVERSED "YELLOW" & "GREEN" LEADS ON TERM. 4 & 6. IN REAR OF CHASSIS
2. 5-27-50

ER 4586-66
DWG. WAS 20X-16-CJ-REV. TITLE
1. 12-2-49
FORM NO. F-2145

ISSUE NO.

| | | | | |
|---|---|---|---|---|
| TOKYO | ✓ | NEWHOUSE | ✓ | |
| M-H | | | | |
| TORONTO | ✓ | | | 354796 |
| REPRODUCTION LOCATED AT | | 4586 | JOB NOS | USED ON |

LIMITS—ON DIMENSIONS WHERE LIMITS ARE NOT SHOWN USE THE FOLLOWING.—
ON THREE PLACE DECIMALS ± .002
ON ALL OTHER LINEAR DIMENSIONS ± .010
ANGULAR DIMENSIONS ± 1°

| PROJ ENGR. | DRAWN | CHECKED | APPROVED |
|---|---|---|---|
| N.J.S. | | | |

WIRING DIAGRAM
OF CONTROL CIRCUIT TYPE 153031
WITH CONTROL FORM 216 AND
OPTIONAL VARIATION 093

MINNEAPOLIS-HONEYWELL REG. CO.
BROWN INSTRUMENTS DIVISION
PHILADELPHIA, PA., U.S.A. MP

SCALE
DATE 12-1-49
DRAWING NO. 355176

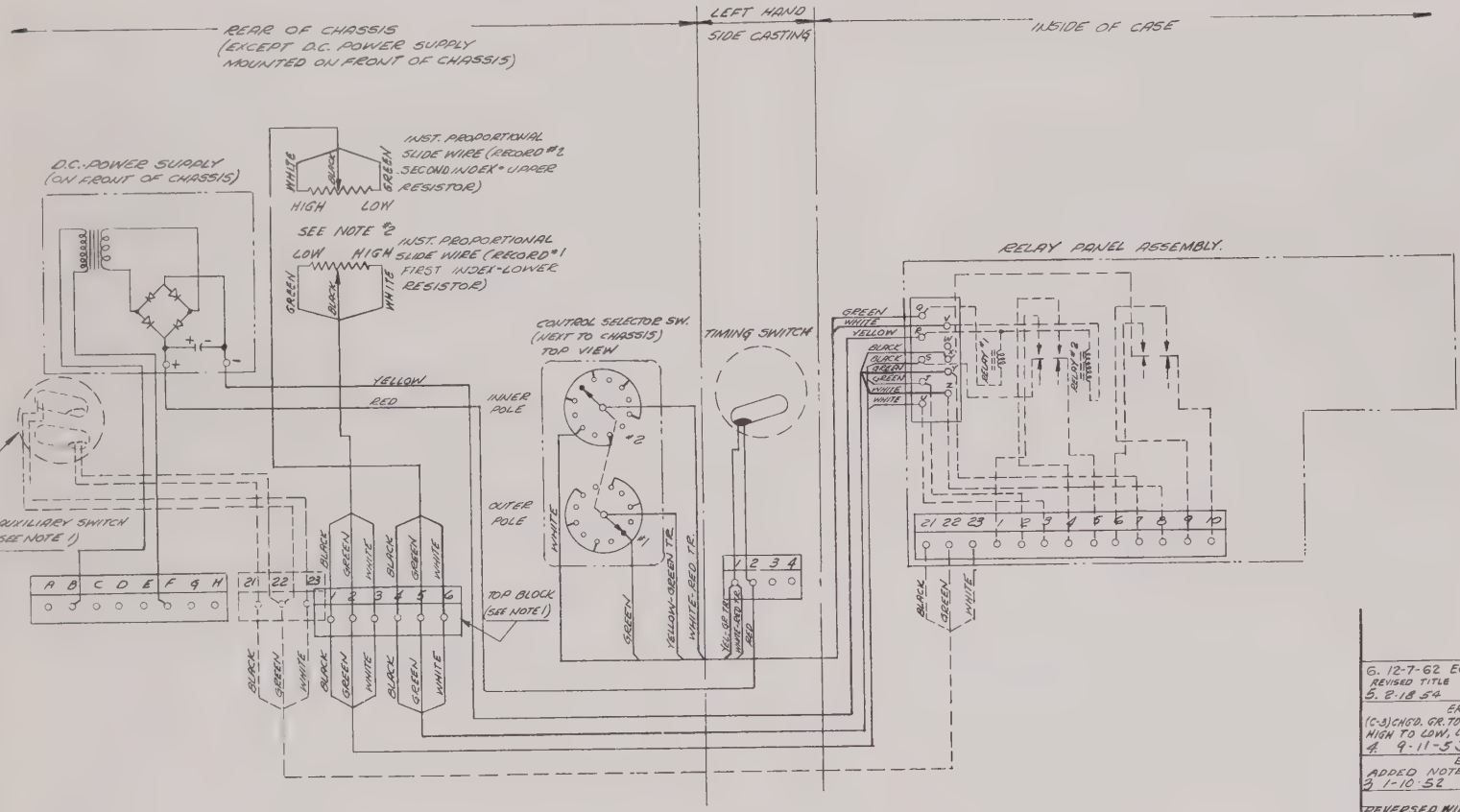


NOTE:—

1- THIS PORTION OF CIRCUIT SUPPLIED ONLY ON INSTRUMENTS WITH BACK-SET AUXILIARY SWITCHES. AUXILIARY SWITCH TERMINAL BLOCK MOUNTED AGAINST CHASSIS UNDER CONTROL SWITCH TERMINAL BLOCK

2- LOW = BELOW CONTROL POINT
HIGH = ABOVE CONTROL POINT

6. 12-7-62 EO-2223
REVISED TITLE
5. 2-18-54

ER 2671-1
(C-3) CHGD. GR. TO WH, WH. TO GR, HIGH TO LOW, LOW TO HIGH
4. 9-11-53

ER. 2320-1
ADDED NOTE #2
3 1-10-52

ER-770-1
REVERSED WIRING FOR PROP SLIDEWIRE
2. 5-27-50

E.R. 4586-66
DWG. WAS 20-X-16-CK
1. 12-2-49
FORM NO. F-2148

S

ISSUE NO.

| | | | |
|---|---|---|---|
| TOKYO M-H | ✓ | NEWHOUSE | ✓ |
| TORONTO | ✓ | | |
| LONDON | | | |
| REPRODUCTION LOCATED AT | | JOB NOS | USED ON |
| | | 45A6 | 354796 355174 |

LIMITS—ON DIMENSIONS WHERE LIMITS ARE NOT SHOWN USE THE FOLLOWING —
ON THREE PLACE DECIMALS ± .002
ON ALL OTHER LINEAR DIMENSIONS ± .010
ANGULAR DIMENSIONS ± 1°

| PROJ ENGR | DRAWN | CHECKED | APPROVED |
|---|---|---|---|
| [signature] | [signature] | | |

WIRING DIAGRAM
OF CONTROL CIRCUIT TYPE 153031
WITH CONTROL FORM 213 & 215 AND
OPTIONAL VARIATION 093

MINNEAPOLIS-HONEYWELL REG. CO.
BROWN INSTRUMENTS DIVISION
PHILADELPHIA, PA., U.S.A. MP

| SCALE | DRAWING NO |
|---|---|
| 1/4 | 355177 |
| DATE 12-2-49 | |

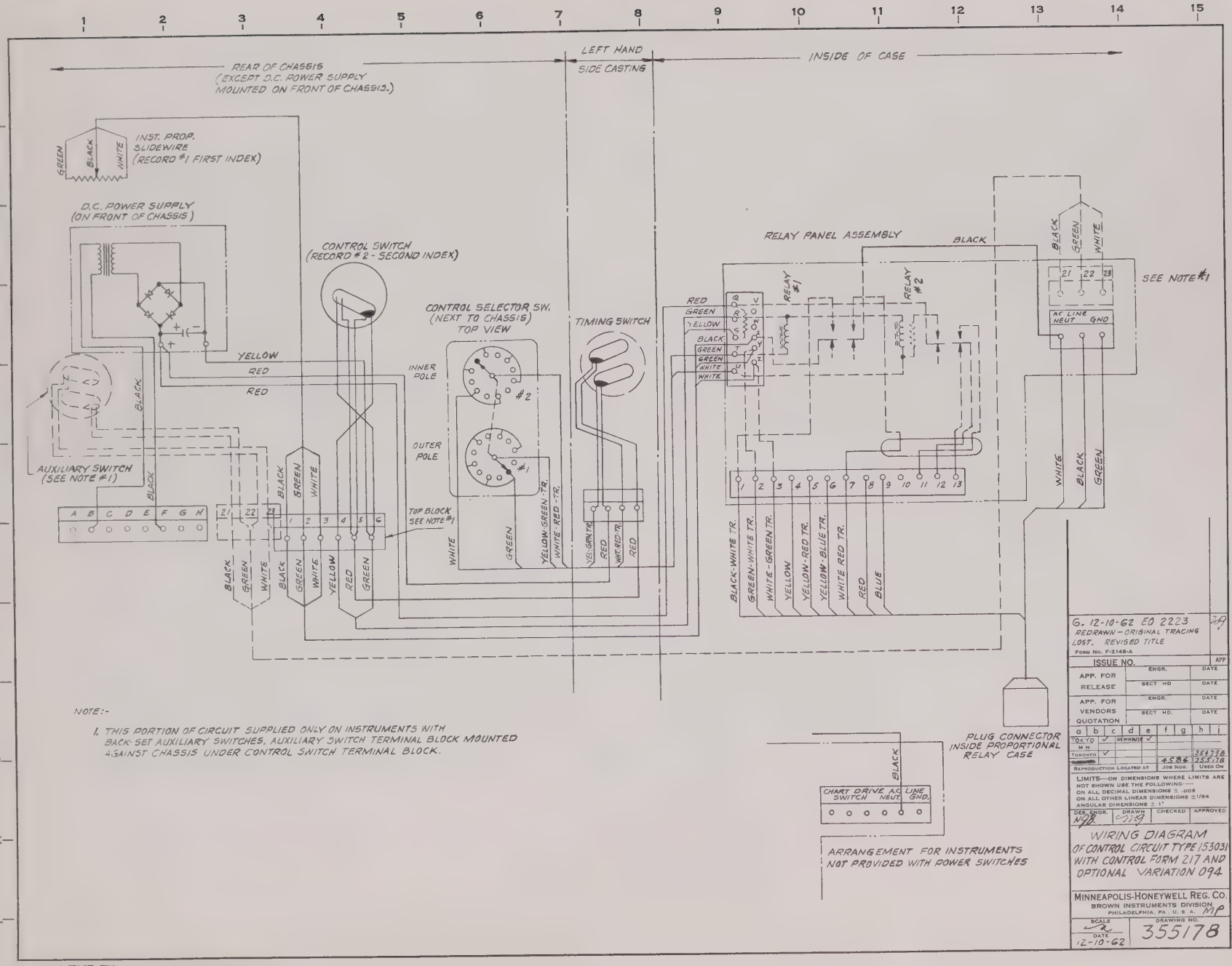

REAR OF CHASSIS (EXCEPT D.C. POWER SUPPLY MOUNTED ON FRONT OF CHASSIS.)
LEFT HAND SIDE CASTING
INSIDE OF CASE
INST. PROP. SLIDEWIRE (RECORD #1 FIRST INDEX)
GREEN
BLACK
WHITE
D.C. POWER SUPPLY (ON FRONT OF CHASSIS)
CONTROL SWITCH (RECORD #2 - SECOND INDEX)
CONTROL SELECTOR SW. (NEXT TO CHASSIS) TOP VIEW
TIMING SWITCH
RELAY PANEL ASSEMBLY
RELAY #1
RELAY #2
SEE NOTE #1
AC LINE NEUT GND
YELLOW
RED
INNER POLE
OUTER POLE
#2
#1
AUXILIARY SWITCH (SEE NOTE #1)
TOP BLOCK SEE NOTE #1
A B C D E F G H
21 22 23
1 2 3 4 5 6
YELLOW-GREEN-TR.
WHITE-RED-TR.
YEL-GRN.TR.
WHT.-RED-TR.
BLACK-WHITE TR.
GREEN-WHITE TR.
WHITE-GREEN TR.
YELLOW-RED TR.
YELLOW-BLUE TR.
WHITE RED TR.
BLUE
PLUG CONNECTOR INSIDE PROPORTIONAL RELAY CASE
CHART DRIVE SWITCH
AC LINE NEUT. GND.
ARRANGEMENT FOR INSTRUMENTS NOT PROVIDED WITH POWER SWITCHES
NOTE:-
1. THIS PORTION OF CIRCUIT SUPPLIED ONLY ON INSTRUMENTS WITH BACK-SET AUXILIARY SWITCHES. AUXILIARY SWITCH TERMINAL BLOCK MOUNTED AGAINST CHASSIS UNDER CONTROL SWITCH TERMINAL BLOCK.
G. 12-10-62 EO 2223
REDRAWN - ORIGINAL TRACING LOST. REVISED TITLE
FORM NO. F-2148-A
ISSUE NO.
APP
APP. FOR RELEASE
ENGR.
DATE
SECT HD
APP. FOR VENDORS QUOTATION
TOKYO
MH
TORONTO
REPRODUCTION LOCATED AT
JOB NOS.
USED ON
LIMITS—ON DIMENSIONS WHERE LIMITS ARE NOT SHOWN USE THE FOLLOWING:—
ON ALL DECIMAL DIMENSIONS ± .005
ON ALL OTHER LINEAR DIMENSIONS ±1/64
ANGULAR DIMENSIONS ± 1°
DES. ENGR.
DRAWN
CHECKED
APPROVED
WIRING DIAGRAM OF CONTROL CIRCUIT TYPE 153031 WITH CONTROL FORM 217 AND OPTIONAL VARIATION 094
MINNEAPOLIS-HONEYWELL REG. CO.
BROWN INSTRUMENTS DIVISION
PHILADELPHIA, PA., U. S. A.
SCALE
DATE 12-10-62
DRAWING NO. 355178

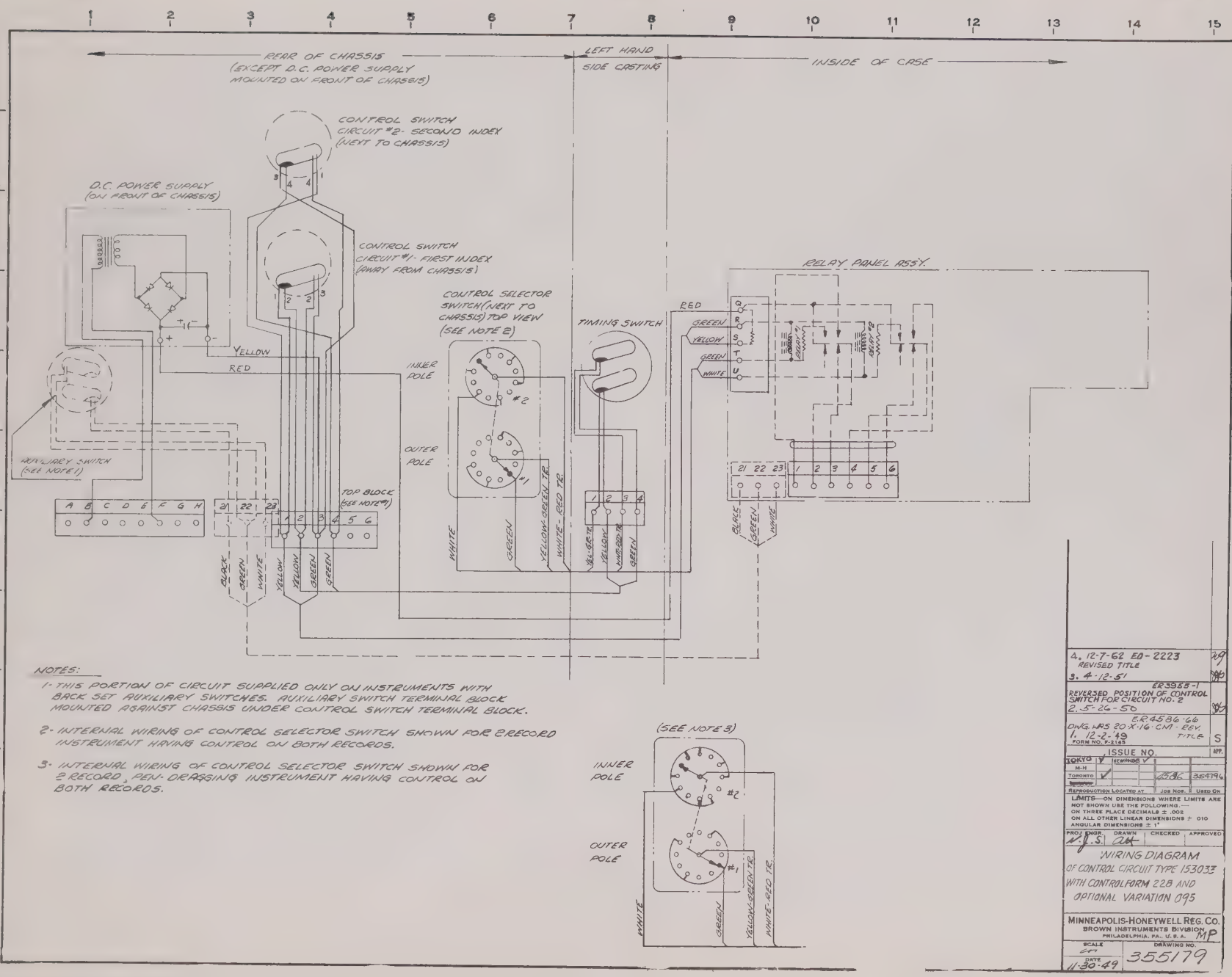


NOTES:

1- THIS PORTION OF CIRCUIT SUPPLIED ONLY ON INSTRUMENTS WITH BACK SET AUXILIARY SWITCHES. AUXILIARY SWITCH TERMINAL BLOCK MOUNTED AGAINST CHASSIS UNDER CONTROL SWITCH TERMINAL BLOCK.

2- INTERNAL WIRING OF CONTROL SELECTOR SWITCH SHOWN FOR 2 RECORD INSTRUMENT HAVING CONTROL ON BOTH RECORDS.

3- INTERNAL WIRING OF CONTROL SELECTOR SWITCH SHOWN FOR 2 RECORD, PEN-DRAGGING INSTRUMENT HAVING CONTROL ON BOTH RECORDS.

4. 12-7-62 ED-2223 REVISED TITLE
3. 4-12-51 ED3565-1
REVERSED POSITION OF CONTROL SWITCH FOR CIRCUIT NO. 2
2. 5-26-50 E.R 4586-66
DWG. WAS 20-X-16-CM-REV.
1. 12-2-49 TITLE
FORM NO. P-2165

ISSUE NO.

| | | REVISED | | | |
|---|---|---|---|---|---|
| TOKYO | Y | | | | |
| M-H | | | | | |
| TORONTO | ✓ | | | 5306 | 364796 |

REPRODUCTION LOCATED AT | JOB NOS. | USED ON

LIMITS—ON DIMENSIONS WHERE LIMITS ARE NOT SHOWN USE THE FOLLOWING:—
ON THREE PLACE DECIMALS ± .002
ON ALL OTHER LINEAR DIMENSIONS ± .010
ANGULAR DIMENSIONS ± 1°

| PROJ. ENGR. | DRAWN | CHECKED | APPROVED |
|---|---|---|---|
| W.J.S. | | | |

WIRING DIAGRAM OF CONTROL CIRCUIT TYPE 153033 WITH CONTROL FORM 22B AND OPTIONAL VARIATION 095

MINNEAPOLIS-HONEYWELL REG. CO.
BROWN INSTRUMENTS DIVISION
PHILADELPHIA, PA., U.S.A.

| SCALE | DRAWING NO. |
|---|---|
| DATE 11-30-49 | 355179 |

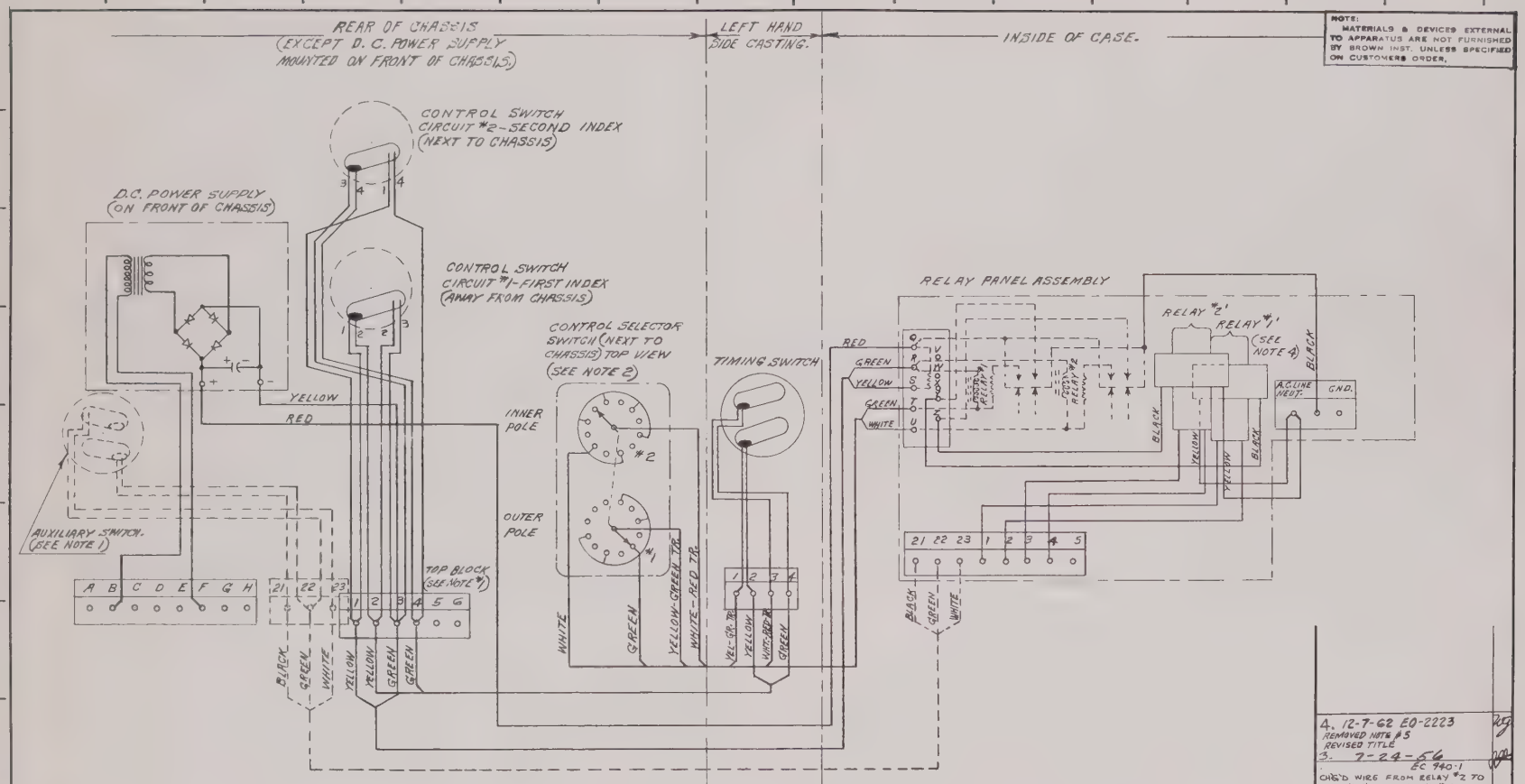


NOTES—

1. THIS PORTION OF CIRCUIT SUPPLIED ONLY ON INSTRUMENTS WITH BACK SET AUXILIARY SWITCHES. AUXILIARY SWITCH TERMINAL BLOCK MOUNTED AGAINST CHASSIS UNDER CONTROL SWITCH TERMINAL BLOCK.
2. INTERNAL WIRING OF CONTROL SELECTOR SWITCH SHOWN FOR 2 RECORD INSTRUMENT HAVING CONTROL ON BOTH RECORDS.
3. INTERNAL WIRING OF CONTROL SELECTOR SWITCH SHOWN FOR 2 RECORD PEN-DRAGGING INSTRUMENT HAVING CONTROL ON BOTH RECORDS.
4. MERCURY-PLUNGER RELAY #1' IS MOUNTED BENEATH RELAY #2', RELAYS 1' AND 2' ARE CONTROLLED BY RELAY CIRCUITS #1 AND #2 RESPECTIVELY.

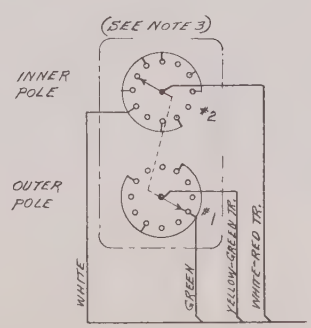


ARRANGEMENT FOR INSTRUMENTS NOT PROVIDED WITH POWER SWITCHES

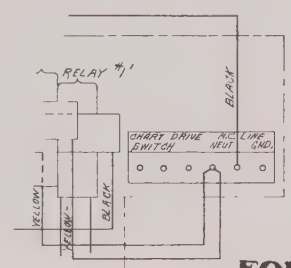


FOR S.O.

App'd _____

Date _____

NOTE: MATERIALS & DEVICES EXTERNAL TO APPARATUS ARE NOT FURNISHED BY BROWN INST. UNLESS SPECIFIED ON CUSTOMERS ORDER.

4. 12-7-62 EO-2223
REMOVED NOTE #5
REVISED TITLE
3. 7-24-56
EC 940-1
CHG'D WIRE FROM RELAY #2 TO TERM'L #4 TO TERM'L #3
CHG'D WIRE FROM RELAY #2 TO TERM'L #5 TO TERM'L #4
2. 10-2-52
ER-1320-1
CONTROL FORM WAS 221 IN TITLE
DWG. NO. WAS 23-R-57-AU
1. 7-17-51
FORM NO. F-2148

ISSUE NO.

| | | | | |
|---|---|---|---|---|
| DRVG | ✓ | NEWROOM | ✓ | |
| M-H | | | | |
| TORONTO | ✓ | | | |

REPRODUCTION LOCATED AT | JOB NOS. | USED ON

LIMITS—ON DIMENSIONS WHERE LIMITS ARE NOT SHOWN USE THE FOLLOWING—
ON THREE PLACE DECIMALS ± .002
ON ALL OTHER LINEAR DIMENSIONS ± .010
ANGULAR DIMENSIONS ± 1°

| PROJ ENGR. | DRAWN | CHECKED | APPROVED |
|---|---|---|---|
| L. Beck | J.P.P. | | E.F. |

WIRING DIAGRAM
OF CONTROL CIRCUIT TYPE 153033
WITH CONTROL FORM 122 AND
OPTIONAL VARIATION 095

MINNEAPOLIS-HONEYWELL REG. CO.
BROWN INSTRUMENTS DIVISION
PHILADELPHIA PA U S A

SCALE | DRAWING NO. 359017
DATE JULY 17TH 1951

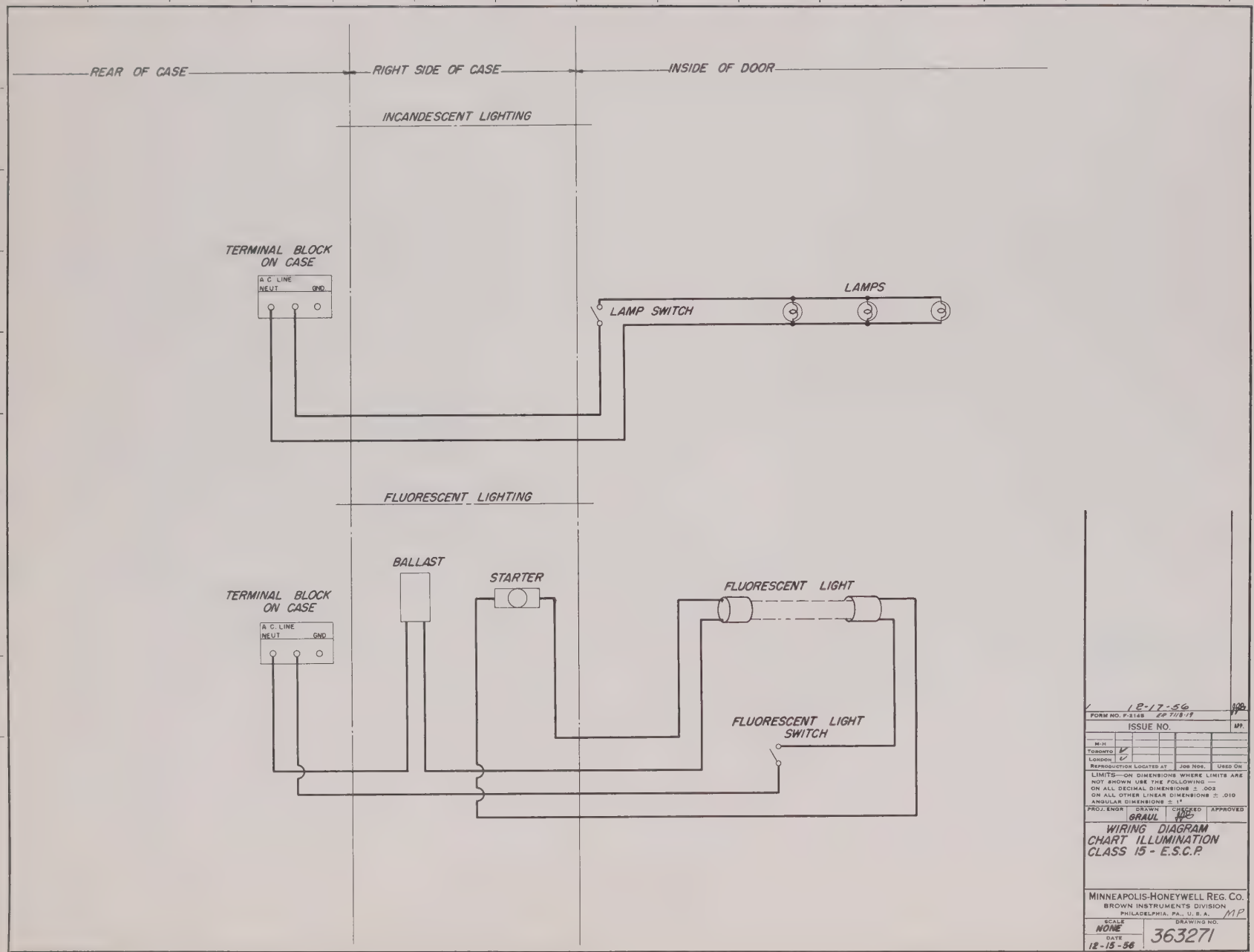
REAR OF CASE
RIGHT SIDE OF CASE
INSIDE OF DOOR
INCANDESCENT LIGHTING
TERMINAL BLOCK ON CASE
A C LINE
NEUT
GND
LAMPS
LAMP SWITCH
FLUORESCENT LIGHTING
BALLAST
STARTER
FLUORESCENT LIGHT
TERMINAL BLOCK ON CASE
A C. LINE
NEUT
GND
FLUORESCENT LIGHT SWITCH
12-17-56
FORM NO. F-2145
ISSUE NO.
M-H
TORONTO
LONDON
REPRODUCTION LOCATED AT
JOB NOS.
USED ON
LIMITS—ON DIMENSIONS WHERE LIMITS ARE NOT SHOWN USE THE FOLLOWING —
ON ALL DECIMAL DIMENSIONS ± .002
ON ALL OTHER LINEAR DIMENSIONS ± .010
ANGULAR DIMENSIONS ± 1°
PROJ. ENGR
DRAWN
GRAUL
CHECKED
APPROVED
WIRING DIAGRAM
CHART ILLUMINATION
CLASS 15 - E.S.C.P.
MINNEAPOLIS-HONEYWELL REG. CO.
BROWN INSTRUMENTS DIVISION
PHILADELPHIA, PA., U. S. A.
MP
SCALE
NONE
DATE
12-15-56
DRAWING NO.
363271

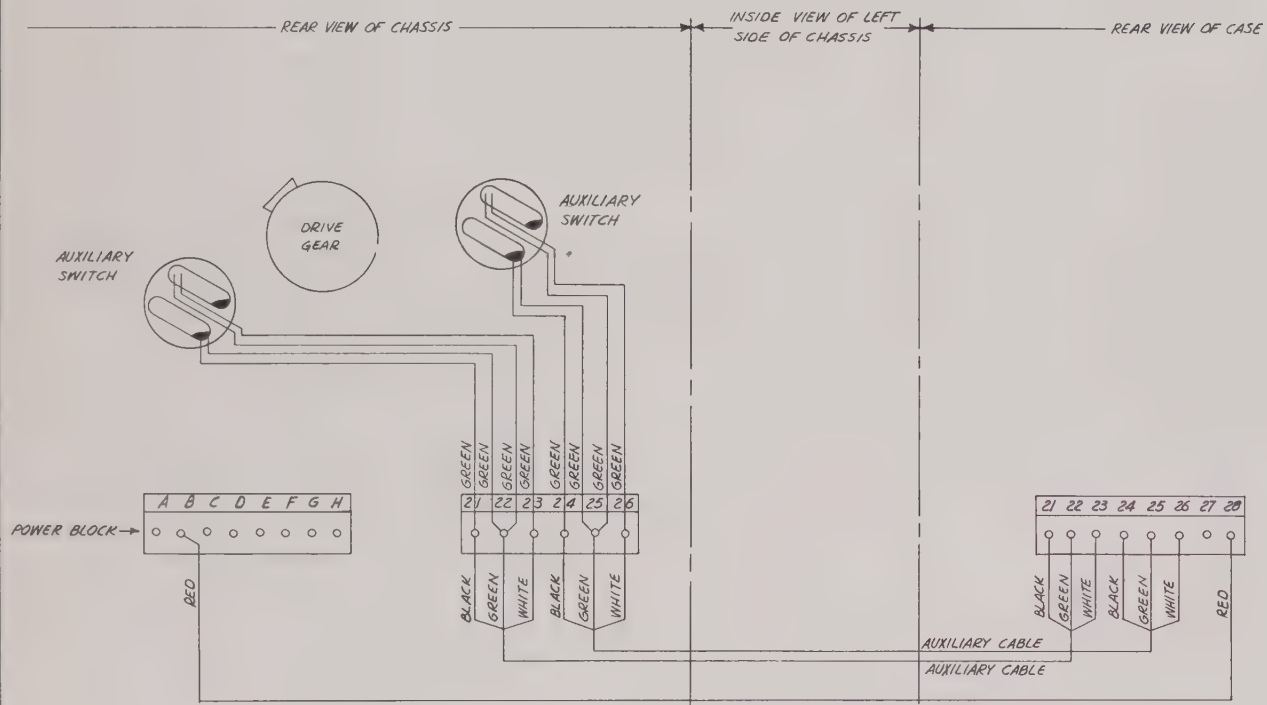


3. 12-4-62 EO-2223
REMOVED ALL REFERENCES TO ALPHA-NUMERIC MODEL NO'S & OPTIONS & CORRECTED IN ORDER TO AGREE WITH OTHER UPDATED CHANGES.
2. 1-28-57
DWG WAS 24-X-40-C EC 1362-1
1. 11-27-56
FORM NO. F-2146

ISSUE NO.

| | | | | |
|---|---|---|---|---|
| TORONTO M-H | ✓ | NEWHOUSE | ✓ | |
| TORONTO | ✓ | | | |
| LONDON | | | | |
| REPRODUCTION LOCATED AT | | JOB NOS. | | USED ON |

LIMITS—ON DIMENSIONS WHERE LIMITS ARE NOT SHOWN USE THE FOLLOWING
ON ALL DECIMAL DIMENSIONS ± .002
ON ALL OTHER LINEAR DIMENSIONS ± .010
ANGULAR DIMENSIONS ± 1°

| PROJ ENGR | DRAWN | CHECKED | APPROVED |
|---|---|---|---|
| SHELLEY | DARAB | | |

WIRING DIAGRAM
SUPPLEMENTARY
TWO S.P.D.T. AUXILIARY
SWITCHES CL15 E.S.C.P.

MINNEAPOLIS-HONEYWELL REG. CO.
BROWN INSTRUMENTS DIVISION
PHILADELPHIA, PA., U. S. A.

SCALE
DATE 9-27-56
DRAWING NO 363497

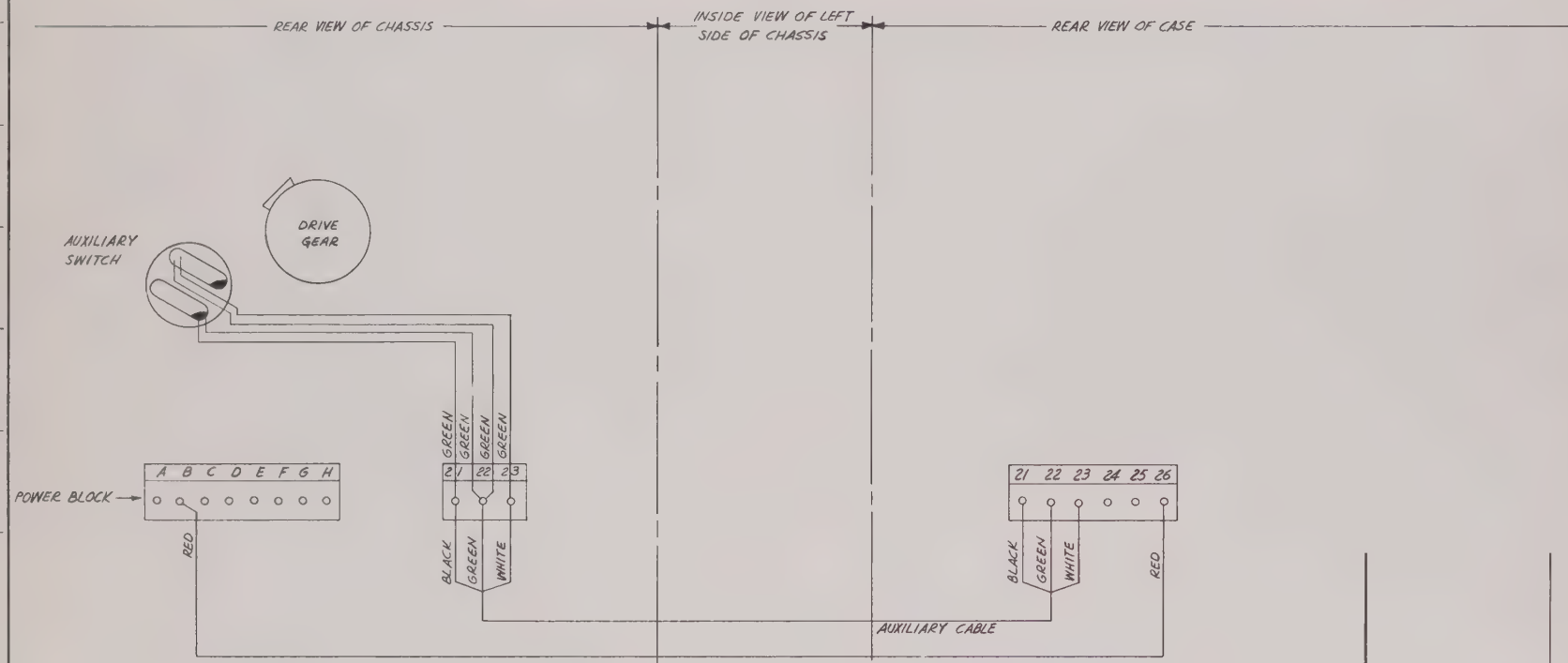


3. 12-4-62 EO-2223
REMOVED ALL REFERENCES TO ALPHA-NUMERIC MODEL NO'S & OPTIONS & CORRECTED IN ORDER TO AGREE WITH OTHER UPDATED CHANGES.
2 1-28-57
DWG. WAS 24-X-40-D EC1362-1
1. 11-27-56
FORM NO. F-2148

| ISSUE NO. | | | | | APP. |
|---|---|---|---|---|---|
| AMATO | ✓ | NEWHOUSE | ✓ | | |
| M-H | | | | | |
| TORONTO | ✓ | | | | |
| REPRODUCTION LOCATED AT | | | | JOB NOS. | USED ON |

LIMITS—ON DIMENSIONS WHERE LIMITS ARE NOT SHOWN USE THE FOLLOWING —
ON ALL DECIMAL DIMENSIONS ± .002
ON ALL OTHER LINEAR DIMENSIONS ± .010
ANGULAR DIMENSIONS ± 1°

| PROJ. ENGR | DRAWN | CHECKED | APPROVED |
|---|---|---|---|
| SHELLEY | DARAB | | |

W/D SUPPLEMENTARY WIRING ONE S.P.D.T. AUX. SWITCH (OPTIONS - 092; 097) CL 15 E.S.C.P.

MINNEAPOLIS-HONEYWELL REG. CO.
BROWN INSTRUMENTS DIVISION
PHILADELPHIA, PA., U. S. A. MP

SCALE
DATE 9-27-56
DRAWING NO. 363498

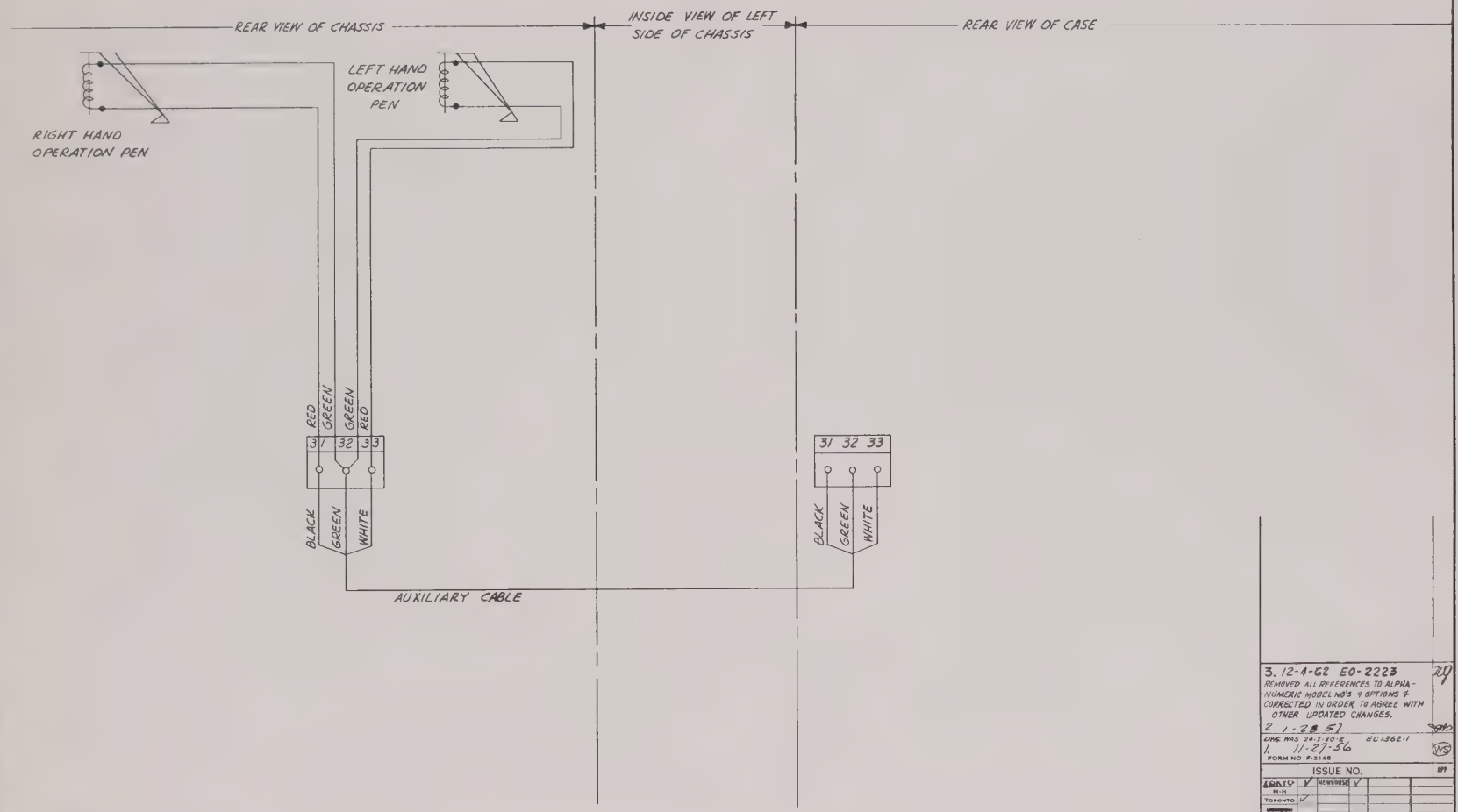


NOTES:

1. WHEN ONLY LEFT HAND OPERATION PEN IS SPECIFIED, PEN IS CONNECTED TO TERMINALS 32 & 33. AUXILIARY CABLE GREEN LEAD GOES TO TERMINAL 32 AND YELLOW LEAD TO TERMINAL 33.
2. WHEN ONLY RIGHT HAND OPERATION PEN IS SPECIFIED, PEN IS CONNECTED TO TERMINALS 31 & 32. AUXILIARY CABLE GREEN LEAD GOES TO TERMINAL 32 AND YELLOW LEAD TO TERMINAL 31.

3. 12-4-62 EO-2223
REMOVED ALL REFERENCES TO ALPHA-NUMERIC MODEL NO'S & OPTIONS & CORRECTED IN ORDER TO AGREE WITH OTHER UPDATED CHANGES.
2 1-28-57
DWG. WAS 24-X-40-E EC1362-1
1. 11-27-56
FORM NO F-2148

ISSUE NO.

| | | | | | |
|---|---|---|---|---|---|
| LOAFTY M-H | ✓ | NEWHOUSE | ✓ | | |
| TORONTO | ✓ | | | | |
| [redacted] | | | | | |
| REPRODUCTION LOCATED AT | | | | JOB NOS | USED ON |

LIMITS—ON DIMENSIONS WHERE LIMITS ARE NOT SHOWN USE THE FOLLOWING
ON ALL DECIMAL DIMENSIONS ± .002
ON ALL OTHER LINEAR DIMENSIONS ± .010
ANGULAR DIMENSIONS ± 1°

| PROJ. ENGR | DRAWN | CHECKED | APPROVED |
|---|---|---|---|
| SHELLEY | DARAB | | |

W/D SUPPLEMENTARY WIRING RIGHT AND/OR LEFT HAND OPERATION PEN.
CL. 15 E.S.C.P.

MINNEAPOLIS-HONEYWELL REG. CO.
BROWN INSTRUMENTS DIVISION
PHILADELPHIA, PA., U. S. A.

SCALE
DATE 9-27-56
DRAWING NO 363499

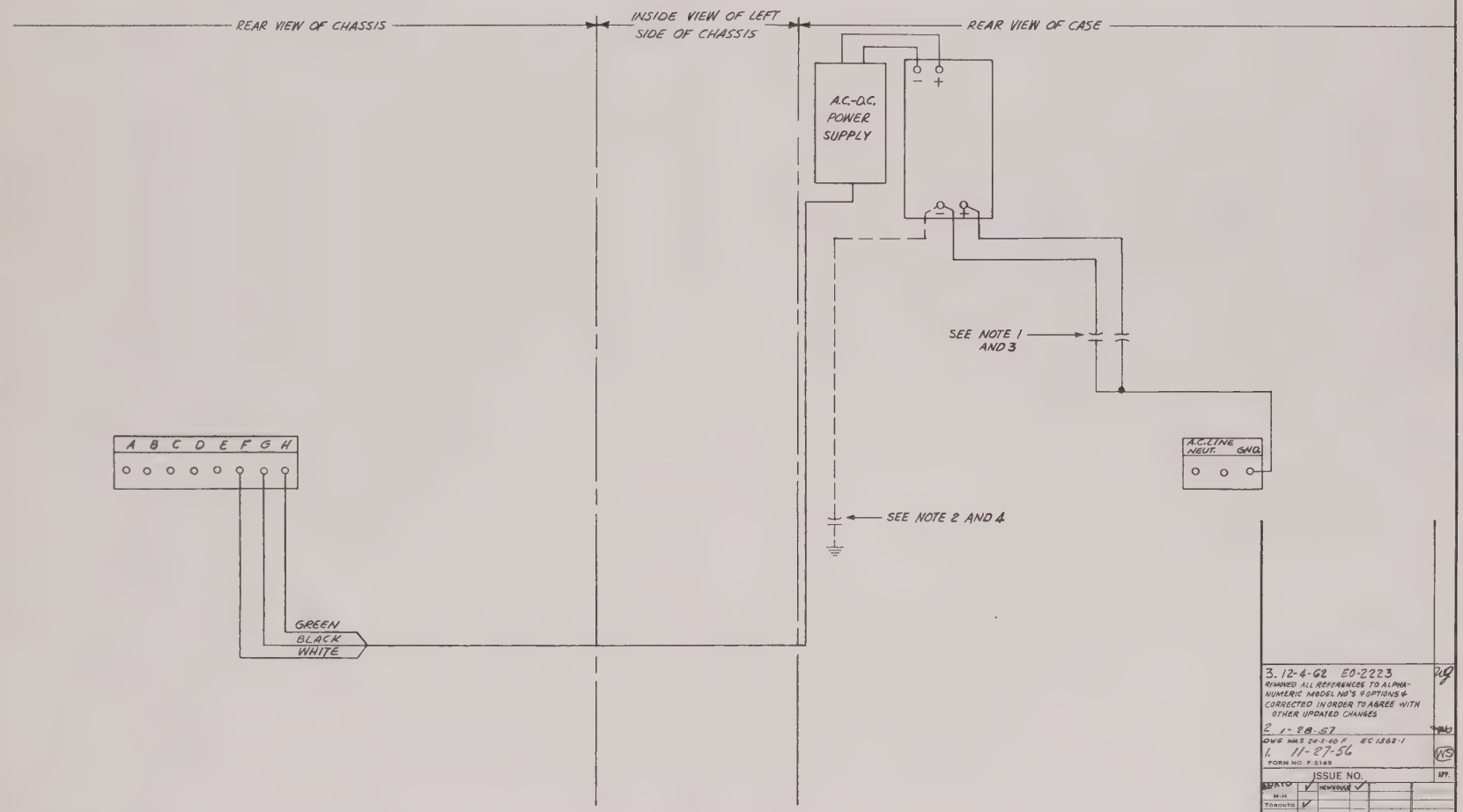


NOTES:-

ALL MODELS EXCEPT CONTACT CONTROLLERS

1. TWO FILTER CAPACITORS USED ON ALL "R" AND "S" RANGES.
2. ONE FILTER CAPACITOR CONNECTED TO THE (-) THERMOCOUPLE TERMINAL IS USED ON THERMOCOUPLE RANGES OVER 850°C OR 1575°F.

CONTACT CONTROLLERS

3. TWO FILTER CAPACITORS USED ON ALL "R" AND "S" RANGES.
4. ONE FILTER CAPACITOR CONNECTED TO (-) THERMOCOUPLE TERMINAL IS USED ON ALL OTHER THERMOCOUPLE RANGES.

3. 12-4-62 EO-2223
REMOVED ALL REFERENCES TO ALPHA-NUMERIC MODEL NO'S & OPTIONS & CORRECTED IN ORDER TO AGREE WITH OTHER UPDATED CHANGES
2. 1-28-57
DWG WAS 24-X-60 F EC 1362-1
1. 11-27-56
FORM NO F 2145

ISSUE NO.

| | | | | |
|---|---|---|---|---|
| ~~DATO~~ | ✓ | NEWHOUSE ✓ | | |
| M-H | | | | |
| TORONTO | ✓ | | | |
| ~~MONSON~~ | | | | |
| REPRODUCTION LOCATED AT | | | JOB NOS. | USED ON |

LIMITS—ON DIMENSIONS WHERE LIMITS ARE NOT SHOWN USE THE FOLLOWING:—
ON ALL DECIMAL DIMENSIONS ± .002
ON ALL OTHER LINEAR DIMENSIONS ± .010
ANGULAR DIMENSIONS ± 1°

| PROJ. ENGR | DRAWN | CHECKED | APPROVED |
|---|---|---|---|
| SHELLEY | DARAB | | |

W/O SUPPLEMENTARY WIRING FILTER CAPACITORS AND/OR AC-DC POWER SUPPLY CL 15 E.S.C.P.

MINNEAPOLIS-HONEYWELL REG. CO.
BROWN INSTRUMENTS DIVISION
PHILADELPHIA, PA., U. S. A.

SCALE

DATE 9-27-56

DRAWING NO 363500

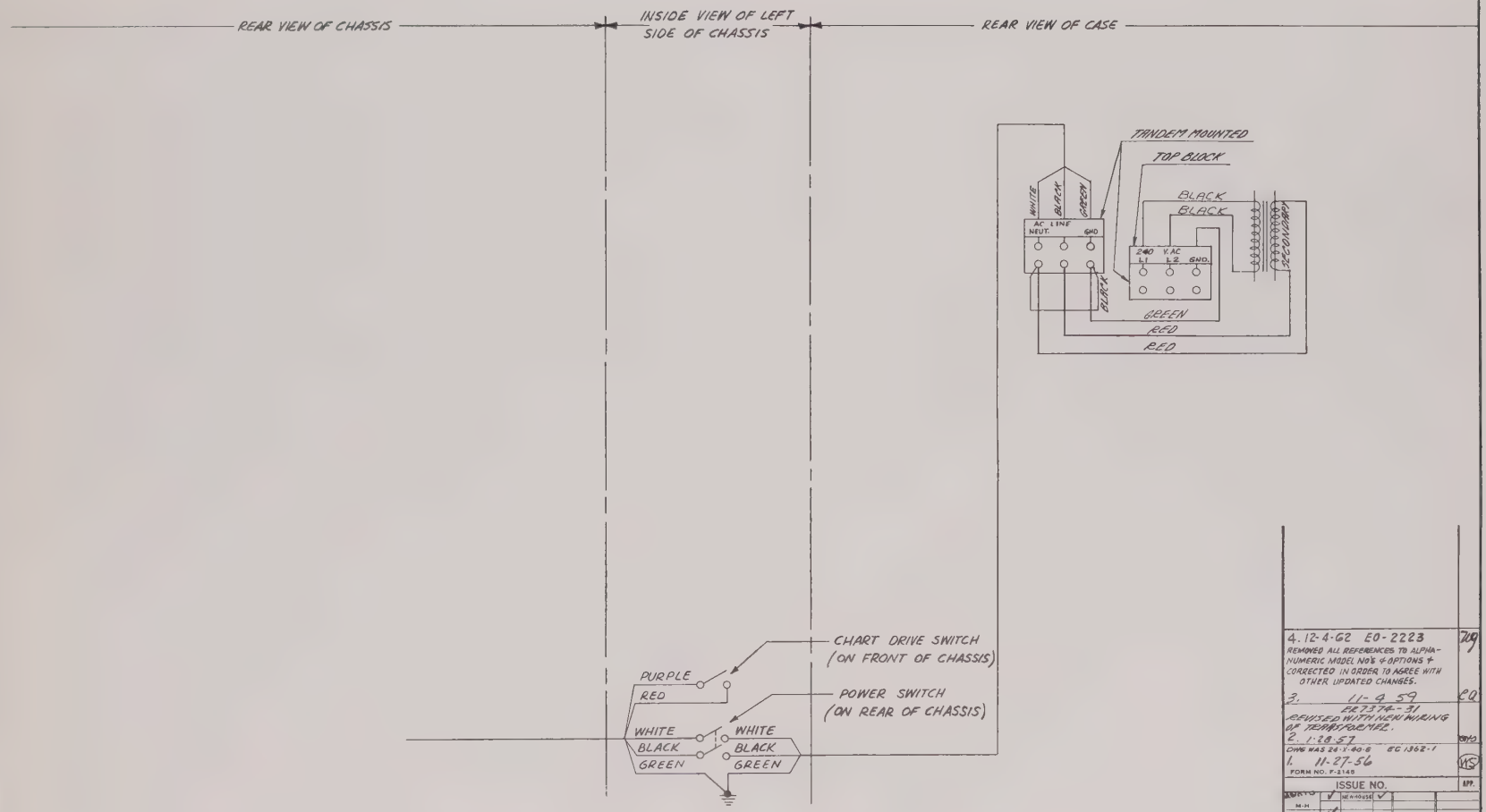


4. 12-4-62 EO-2223 — 709
REMOVED ALL REFERENCES TO ALPHA-NUMERIC MODEL NO'S & OPTIONS & CORRECTED IN ORDER TO AGREE WITH OTHER UPDATED CHANGES.

3. 11-4-59 — CQ
ER 7374-31
REVISED WITH NEW WIRING OF TRANSFORMER.

2. 1-28-57 — [illegible]
DWG WAS 24-X-40-6 EC 1362-1

1. 11-27-56 — WS
FORM NO. F-2145

ISSUE NO. — APP.

| | | | | | |
|---|---|---|---|---|---|
| TORONTO | ✓ | NEW HOUSE | ✓ | | |
| M-H | | | | | |
| TORONTO | ✓ | | | | |
| [redacted] | | | | | |
| REPRODUCTION LOCATED AT | | | | JOB NOS. | USED ON |

LIMITS—ON DIMENSIONS WHERE LIMITS ARE NOT SHOWN USE THE FOLLOWING –
ON ALL DECIMAL DIMENSIONS ± .002
ON ALL OTHER LINEAR DIMENSIONS ± .010
ANGULAR DIMENSIONS ± 1°

| PROJ ENGR | DRAWN | CHECKED | APPROVED |
|---|---|---|---|
| SHELLEY | DARAB | | |

W/D SUPPLEMENTARY
WIRING 240 V.A.C.
OPERATION
CL 15 E.S.C.P.

MINNEAPOLIS-HONEYWELL REG. CO.
BROWN INSTRUMENTS DIVISION
PHILADELPHIA, PA., U. S. A. — MP

SCALE —
DATE 9-27-56
DRAWING NO 363501

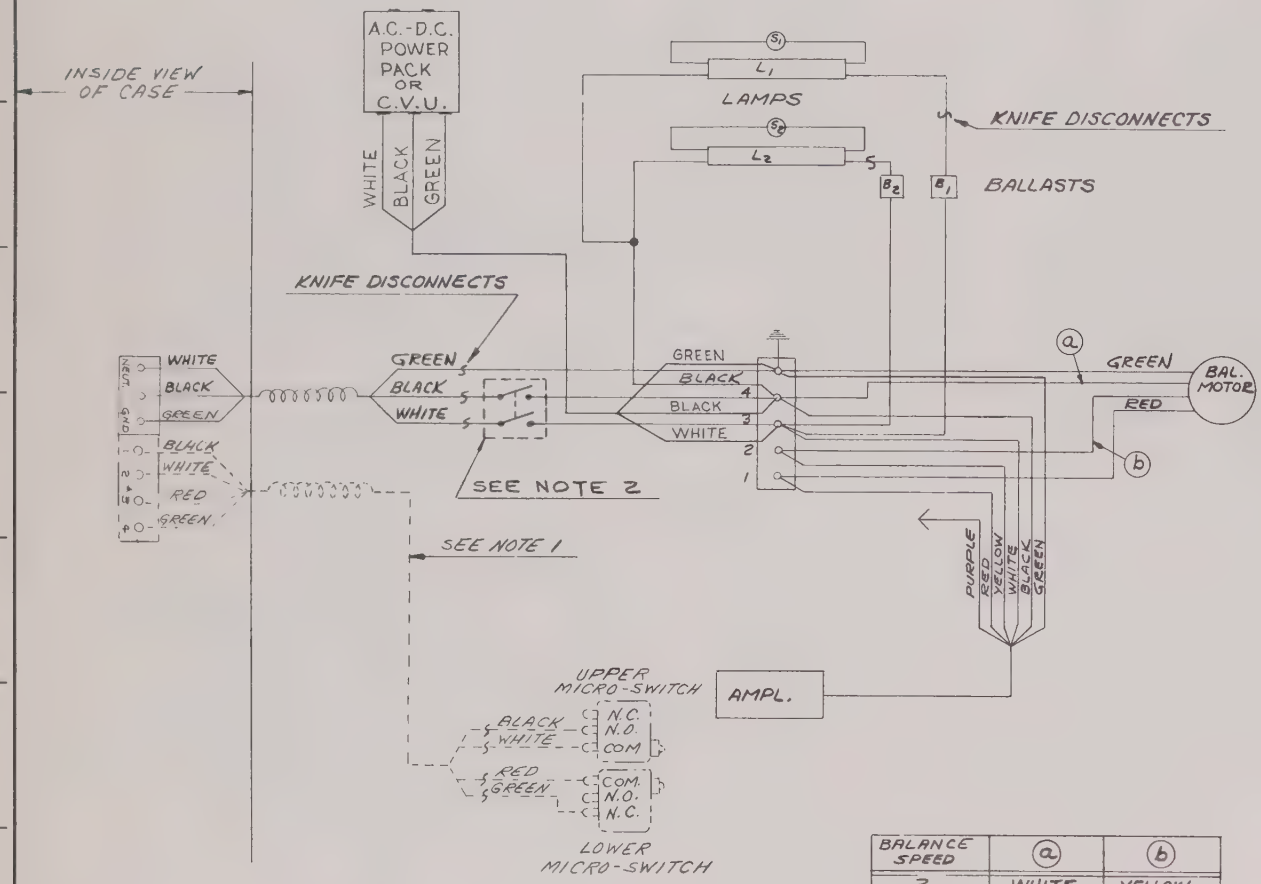


| BALANCE SPEED | ⓐ | ⓑ |
|---|---|---|
| 2 | WHITE | YELLOW |
| 3 | YELLOW | WHITE |

NOTE:
1. THIS PORTION OF CIRCUIT SUPPLIED ONLY ON INSTRUMENTS WITH AUXILIARY SWITCHES 173
2. WHEN POWER SWITCH IS OMITTED (OPTIONS 019 OR 176) CIRCUIT IS SHOWN BY DOTTED LINES.

4, 3-9-53 E.O. 7632-2P
C-3) ADDED SWITCH; C-6) REV'D WIRING
F-6) BALANCE SPEED WAS DIAL SPEED
ADDED NOTE "2; A-3) ADDED CVU
REM'D RES. THERM. FROM TITLE
3 7-15-50

ER 7419-1
A-3) ADDED A.C.-D.C. POWER PACK
2, 5-20-54

EC-4020-180-6
G-1) ADDED NOTE #1
D-1 & F-9) PUT TERMINAL BLOCK & MICRO-SWITCHES IN PHANTOM
A-1) ADDED INSIDE VIEW OF CASE
ADDED "WITH OR WITHOUT AUX. SWITCH W13" TO TITLE
1. 11-22-57

ER 6932-77
FORM NO. F-2148-A

| ISSUE NO. | ENGR. | DATE |
|---|---|---|
| APP. FOR RELEASE | SECT. HD. | DATE |
| APP. FOR VENDORS QUOTATION | ENGR. | DATE |
| | SECT. HD. | DATE |

| a | b | c | d | e | f | g | h | i | j |
|---|---|---|---|---|---|---|---|---|---|
| OKY | ✓ | NEWHOUSE ✓ | | | | | | | |
| M-H | | | | | | | | | |
| TORONTO | ✓ | | | | | | | | |
| ~~LONDON~~ | | | | | | | | | |

| REPRODUCTION LOCATED AT | JOB NOS. | USED ON |
|---|---|---|
| | | |

LIMITS—ON DIMENSIONS WHERE LIMITS ARE NOT SHOWN USE THE FOLLOWING:—
ON ALL DECIMAL DIMENSIONS ± .005
ON ALL OTHER LINEAR DIMENSIONS ± 1/64
ANGULAR DIMENSIONS ± 1°

| DES. ENGR. | DRAWN | CHECKED | APPROVED |
|---|---|---|---|
| | JB | WD | |

INTERNAL WIRING DIAGRAM

VERTICAL SCALE
PRECISION INDICATOR

MINNEAPOLIS-HONEYWELL REG. CO.
BROWN INSTRUMENTS DIVISION
PHILADELPHIA, PA., U. S. A. MP

| SCALE | DRAWING NO. |
|---|---|
| DATE 11-7-57 | 364854 |

364854

J. H. WEIL CO., PHILA.

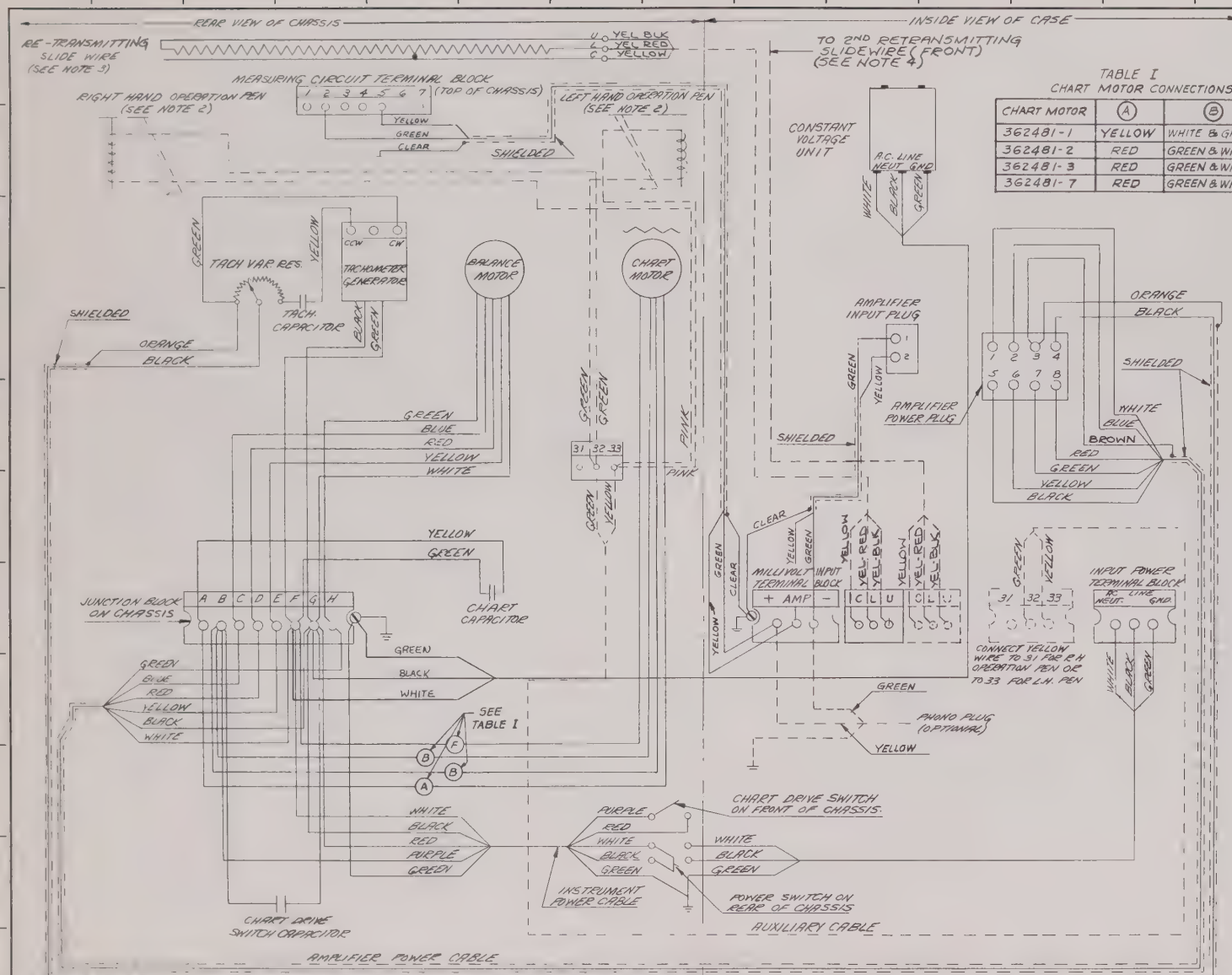


TABLE I
CHART MOTOR CONNECTIONS

| CHART MOTOR | (A) | (B) | (F) |
|---|---|---|---|
| 362481-1 | YELLOW | WHITE & GREEN | RED |
| 362481-2 | RED | GREEN & WHITE | YELLOW |
| 362481-3 | RED | GREEN & WHITE | YELLOW |
| 362481-7 | RED | GREEN & WHITE | YELLOW |

NOTES:- 1. FOR CHART ILLUMINATION REFER TO 363271.
2. THIS PORTION OF CIRCUIT SUPPLIED ONLY WHEN OPERATION PEN IS SPECIFIED. ONLY ONE OPERATION PEN MAY BE SPECIFIED.
3. THIS PORTION OF CIRCUIT IS SUPPLIED WHEN RETRANSMITTING SLIDEWIRE OPTION 068 IS SPECIFIED.
4. THIS PORTION OF CIRCUIT ADDED WHEN TWO RETRANSMITTING SLIDEWIRES OPTION 069 IS SPECIFIED.
5. FOR WIRING OF TWO SPEED CHART DRIVE REFER TO 369862 OR 369863

10. 12-4-62 EO-2223 — REMOVED ALL REFERENCES TO ALPHA-NUMERIC MODEL NO'S & OPTIONS & CORRECTED IN ORDER TO AGREE WITH OTHER UPDATED CHANGES. — 9 3-20-62

EC 4020-2097
F-9 (10) YEL-BLK WAS WHITE
F-9 (10) YEL-RED WAS BLK
F-9 (10) YEL WAS RED
A-7) YEL-RED WAS WHITE
A-7) YEL BLK WAS BLK, YEL WAS RED
A-12) ADDED TABLE
8. 2-12-62

EC-4020-1985
RELOCATED C.V.U. WIRING
7. 2-7-61

EC 4020-1214
RELOCATED C.V.U. WIRING
6. 8-3-60

ER-7272-6
L-1) ADD. NOTE 5.
5. 3 10-60

ER 7180-23
G-10) REVISED TO SHOW 2ND RETRANSMITTING S/W CONN.
A-1) RETRANSMITTING WAS RETRANSMITTER
L-1) REVISED NOTE 3
L-1) ADDED NOTE 4
4. 11 18 59

ER-7180-19
REDRAWN
G-4) REMOVED (JKL) 3 PT TERMINAL BLOCK & REROUTED WIRING
FORM NO F-2168-B

ISSUE NO. | APP
APPROVED | ENGR | DATE | SECT NO | DATE
a b c d e f g h i

NAME WIRING DIAGRAM INTERNAL POWER & CONTROL CIRCUITS FOR 1/4 SE. OND ELECT. STRIP CHART POTEN WITH POWER SWITCHES.

REPRODUCTION LOCATED AT: M-H, TORONTO, PALL RIVER, GERMANY, TOKYO, NEWHOUSE
LIMITS—ON DIMENSIONS WHERE LIMITS ARE NOT SHOWN USE THE FOLLOWING:
ON ALL DECIMAL DIMENSIONS ± .003
ON ALL OTHER LINEAR DIMENSIONS ± 1/64
ANGULAR DIMENSIONS ± 1°

SCALE NONE | DRAWN LADIMAN 11-8-59
JOB NO | ENGR
USED ON | CHECKED CUJ 11-18-59
MATCHK

SPEC NO | MATERIAL | FINISH

MINNEAPOLIS-HONEYWELL REG. CO.
BROWN INSTRUMENTS DIVISION
PHILADELPHIA, PA., U.S.A. MP

DRAWING NO 366054

J. H. WELL CO., PHILA.

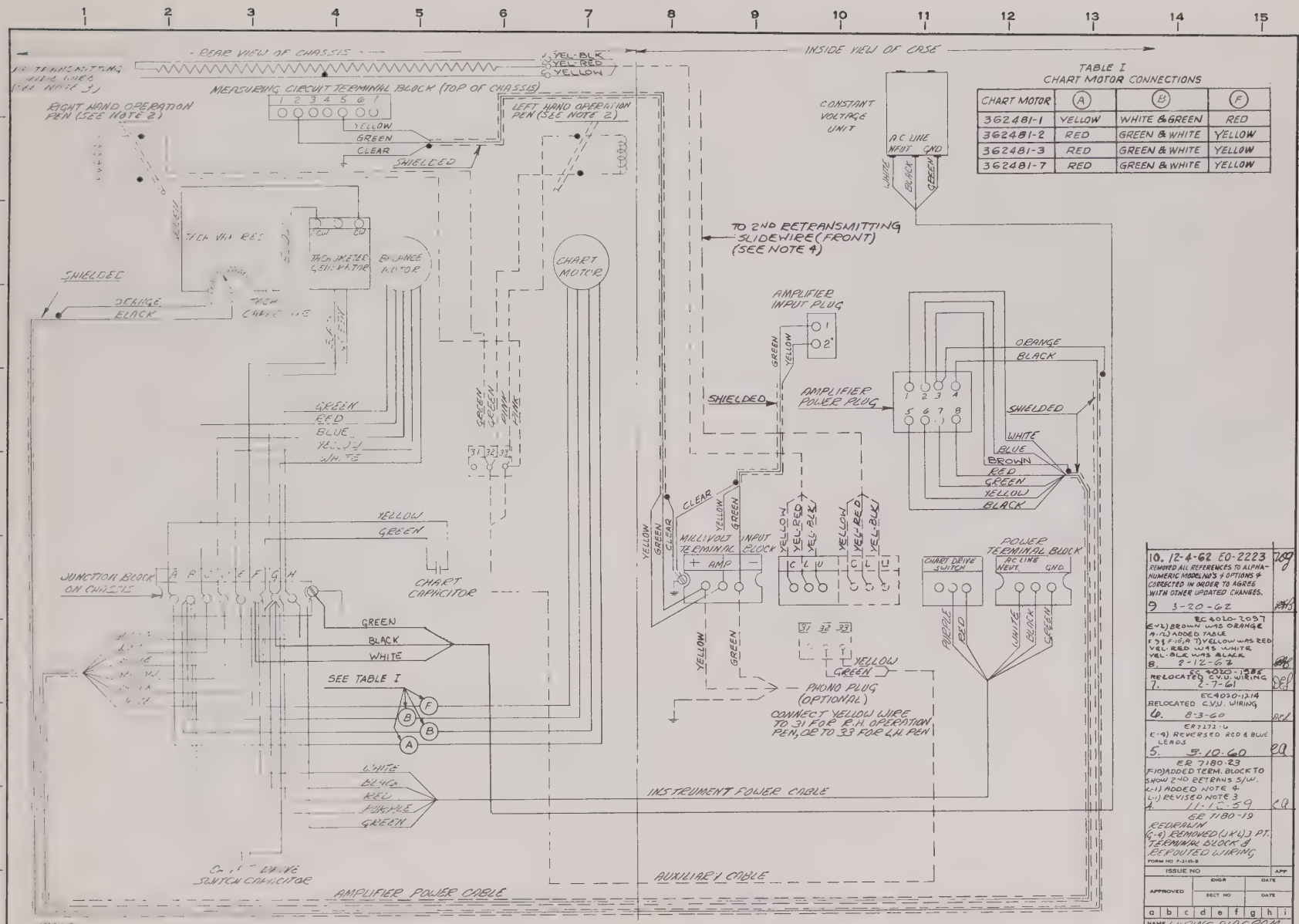


TABLE I
CHART MOTOR CONNECTIONS

| CHART MOTOR | (A) | (B) | (F) |
|---|---|---|---|
| 362481-1 | YELLOW | WHITE & GREEN | RED |
| 362481-2 | RED | GREEN & WHITE | YELLOW |
| 362481-3 | RED | GREEN & WHITE | YELLOW |
| 362481-7 | RED | GREEN & WHITE | YELLOW |

NOTES:
1. FOR CHART ILLUMINATION REFER TO 363271.
2. THIS PORTION OF CIRCUIT SUPPLIED ONLY WHEN OPERATION PEN IS SPECIFIED ONLY ONE OPERATION PEN MAY BE SPECIFIED.
3. THIS PORTION OF CIRCUIT SUPPLIED WHEN RETRANSMITTING SLIDEWIRE OPTION 068 IS SPECIFIED.
4. THIS PORTION OF CIRCUIT ADDED WHEN TWO RETRANSMITTING S/W OPTION 069 IS SPECIFIED.

| | | | |
|---|---|---|---|
| 10. 12-4-62 EO-2223 REMOVED ALL REFERENCES TO ALPHA-NUMERIC MODEL NO'S & OPTIONS & CORRECTED IN ORDER TO AGREE WITH OTHER UPDATED CHANGES. | | | |
| 9 3-20-62 | | | |
| EC 4020-2097 (E-2) BROWN WAS ORANGE (A-12) ADDED TABLE F-9 & F-10, A-7) YELLOW WAS RED YEL-RED WAS WHITE YEL-BLK WAS BLACK | | | |
| 8. 2-12-62 | | | |
| EC 4020-1986 RELOCATED C.V.U. WIRING | | | |
| 7. 2-7-61 | | | |
| EC4020-1214 RELOCATED C.V.U. WIRING | | | |
| 6. 8-3-60 | | | |
| ER 7272-6 (E-4) REVERSED RED & BLUE LEADS | | | |
| 5. 5-10-60 | | | |
| ER 7180-23 (F-10) ADDED TERM. BLOCK TO SHOW 2ND RETRANS S/W. (L-1) ADDED NOTE 4 (L-1) REVISED NOTE 3 | | | |
| 4. 11-10-59 | | | |
| ER 7180-19 REDRAWN (G-4) REMOVED (J K L) 3 PT. TERMINAL BLOCK & REROUTED WIRING | | | |
| FORM NO F-2145-B | | | |
| ISSUE NO | | | APP |
| APPROVED | ENGR | DATE | |
| | SECT NO | DATE | |
| a b c d e f g h i | | | |

| REPRODUCTION LOCATED AT | | | |
|---|---|---|---|
| M H | | FALL RIVER | |
| TORONTO | ✓ | GERMANY | |
| ~~[illegible]~~ | | TOKYO | ✓ |
| KEYHOUSE | ✓ | | |
| SPEC NO | | | |

LIMITS—ON DIMENSIONS WHERE LIMITS ARE NOT SHOWN USE THE FOLLOWING -
ON ALL DECIMAL DIMENSIONS ± .005
ON ALL OTHER LINEAR DIMENSIONS ± 1/64
ANGULAR DIMENSIONS ± 1°

MATERIAL

| | | | | |
|---|---|---|---|---|
| SCALE NONE | DRAWN | KNORR | 11-10-59 | |
| JOB NO | ENGR | | | |
| USED ON | CHECKED | CAA | 11-12-59 | |
| REFERENCE | MAT CHK | | | |

FINISH

MINNEAPOLIS-HONEYWELL REG. CO.
BROWN INSTRUMENTS DIVISION
PHILADELPHIA, PA., U.S.A. MP

NAME WIRING DIAGRAM INTERNAL POWER & CONTROL CIRCUITS FOR 1/4 SECOND ELECT STRIP CHART POTEN. W/O POWER SWITCHES

DRAWING NO 366055

J. H. WELL CO. PHILA.

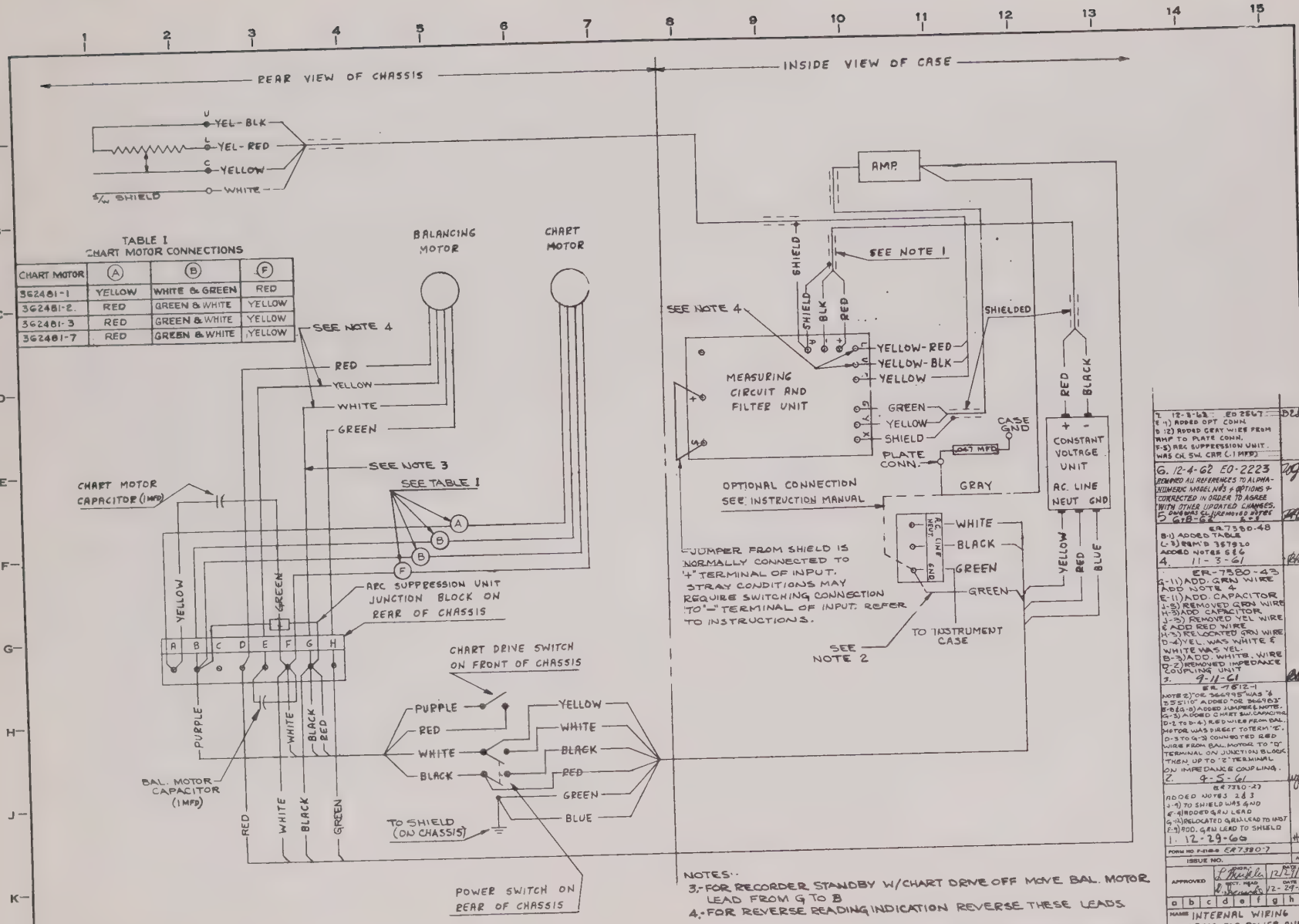


NOTE:

1. DOTTED LINES AROUND SLIDEWIRE, AMPLIFIER AND CONSTANT VOLTAGE UNIT TO MEASURING CIRCUIT UNIT REPRESENT SHIELDING AROUND THE RESPECTIVE CABLES.
2. TO FLOAT CHASSIS WITH SHIELD, SEE INSTRUCTION MANUAL.

NOTES:

3. FOR RECORDER STANDBY W/CHART DRIVE OFF MOVE BAL. MOTOR LEAD FROM G TO B
4. FOR REVERSE READING INDICATION REVERSE THESE LEADS

| | |
|---|---|
| 7 | 12-8-62 ED 2567 (F-4) ADDED OPT CONN. (D-12) ADDED GRAY WIRE FROM AMP TO PLATE CONN. (F-5) ABC SUPPRESSION UNIT WAS CH. SW. CAP (.1 MFD) |
| 6 | 12-4-62 EO-2223 REMOVED ALL REFERENCES TO ALPHA-NUMERIC MODEL NOS & OPTIONS & CORRECTED IN ORDER TO AGREE WITH OTHER UPDATED CHANGES. DWG WAS CL 1 REMOVED NOTES 4 & 5 GTB-62 |
| 5 | ER-7380-48 (B-1) ADDED TABLE (L-3) REM'D 357910 ADDED NOTES 5 & 6 11-3-61 |
| 4 | ER-7380-43 (J-11) ADD. GRN WIRE ADD NOTE 4 (E-11) ADD. CAPACITOR (J-5) REMOVED GRN WIRE (M-3) ADD CAPACITOR (J-5) REMOVED YEL WIRE & ADD RED WIRE (H-3) RELOCATED GRN WIRE (D-4) YEL. WAS WHITE & WHITE WAS YEL (B-3) ADD. WHITE WIRE (D-2) REMOVED IMPEDANCE COUPLING UNIT 9-11-61 |
| 3 | ER-7612-1 NOTE 2) "OR 364995 WAS "& 355110" ADDED "OR 364963" (B-8 & G-8) ADDED JUMPER & NOTE 5. (G-3) ADDED CHART BAL CAPACITOR (D-2 TO D-4) RED WIRE FROM BAL. MOTOR WAS DIRECT TO TERM "E". (D-3 TO G-3) CONNECTED RED WIRE FROM BAL. MOTOR TO "D" TERMINAL ON JUNCTION BLOCK THEN UP TO "2" TERMINAL ON IMPEDANCE COUPLING. 4-5-61 |
| 2 | ER 7380-27 ADDED NOTES 2 & 3 (J-9) TO SHIELD WAS GND (E-4) ADDED G RN LEAD (G-11) RELOCATED G RN LEAD TO INST (E-9) ADD. G RN LEAD TO SHIELD 12-29-60 |
| 1 | |

FORM NO 7-128-8 ER 7380-7

ISSUE NO. | APP

APPROVED | DATE 12-29-60

NAME INTERNAL WIRING DIAGRAM FOR POWER AND MEASURING SYSTEM FOR 153078 OR 154078 ONE SEC. HIGH IMPEDANCE, HIGH GAIN - CL 15

DRAWING NO. 368275

CL. 3

| | | | | | |
|---|---|---|---|---|---|
| LIMITS—ON DIMENSIONS WHERE LIMITS ARE NOT SHOWN USE THE FOLLOWING: ON ALL DECIMAL DIMENSIONS ± .005 ON ALL OTHER LINEAR DIMENSIONS ± 1/64 ANGULAR DIMENSIONS ± 1° | SCALE NONE | DRAWN | L.W.S. 12/23/60 | REPRODUCTION LOCATED AT | |
| | JOB NO. 7380 INR | ENGR | 12/29/60 | N-H | FALL RIVER |
| | USED ON | CHECKED | | TORONTO | GERMANY |
| | REFERENCE 369599 | MAT. CHK | | ABBOTSFORD | TOKYO |
| SPEC. NO. | MATERIAL | FINISH | | NEWHOUSE | SWITZERLAND |

MINNEAPOLIS-HONEYWELL REG. CO.
BROWN INSTRUMENTS DIVISION
PHILADELPHIA, PA., U.S.A.
MP

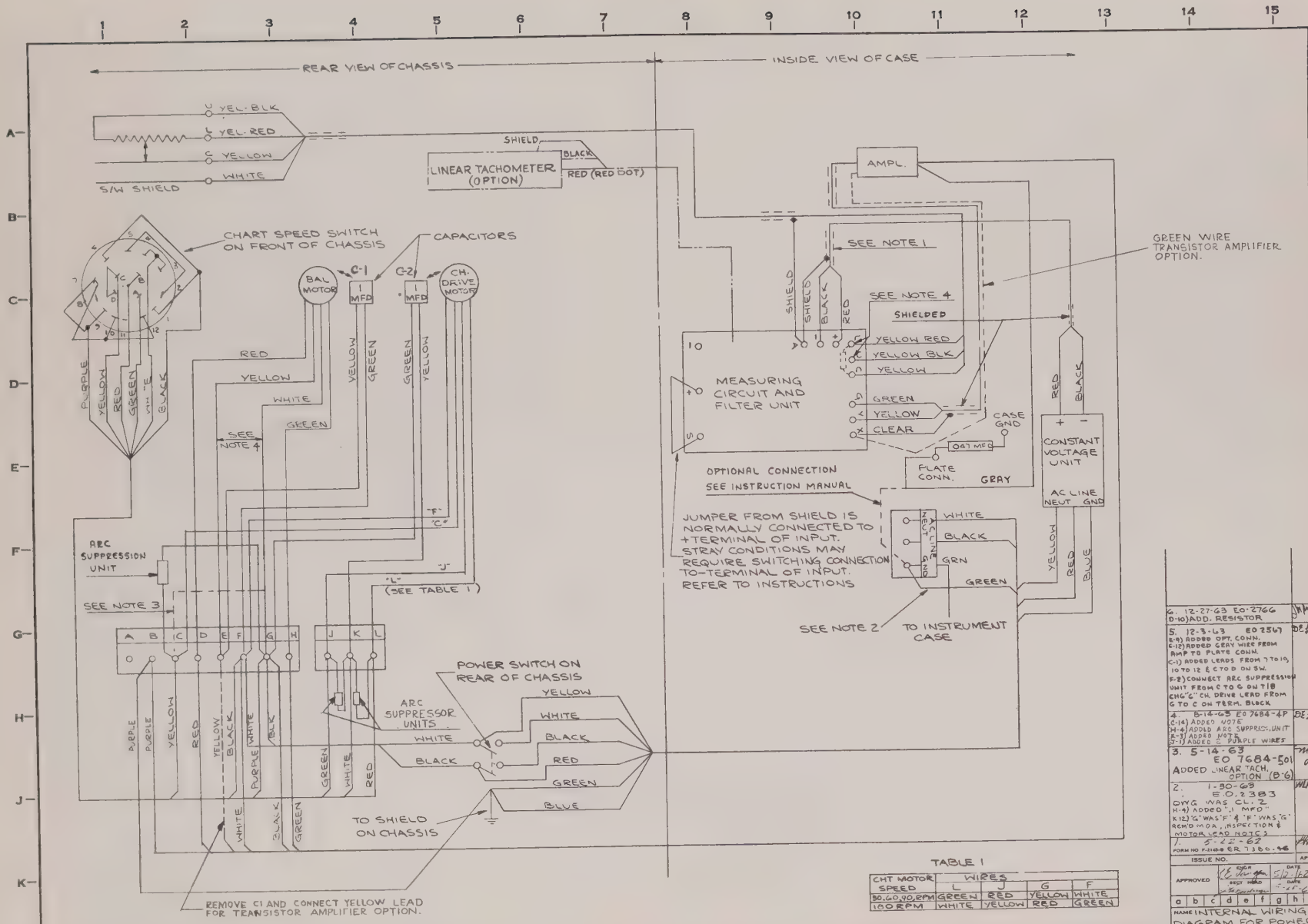


TABLE 1

| CHT MOTOR SPEED | WIRES L | J | G | F |
|---|---|---|---|---|
| 50,60,90 RPM | GREEN | RED | YELLOW | WHITE |
| 180 RPM | WHITE | YELLOW | RED | GREEN |

1.- DOTTED LINES AROUND SLIDEWIRE, AMPLIFIER & CONSTANT VOLTAGE UNIT TO MEASURING CIRCUIT UNIT REPRESENT SHIELDING AROUND RESPECTIVE CABLES.
2.- TO FLOAT CHASSIS WITH SHIELD, SEE INSTRUCTION MANUAL
3.- FOR RECORDER STAND BY W/CHART DRIVE OFF MOVE BAL. MOTOR LEAD FROM G TO C
4.- FOR REVERSE READING INDICATION REVERSE THESE LEADS

6. 12-27-63 EO-2766 D-10) ADD. RESISTOR
5. 12-3-63 EO 2567 E-9) ADDED OPT. CONN. E-12) ADDED GRAY WIRE FROM AMP TO PLATE CONN. C-1) ADDED LEADS FROM 7 TO 10, 10 TO 12 & C TO D ON SW. F-2) CONNECT ARC SUPPRESSION UNIT FROM C TO G ON T/B CHG "G" CH. DRIVE LEAD FROM G TO C ON TERM. BLOCK
4. 8-14-63 EO 7684-4P C-14) ADDED NOTE H-4) ADDED ARC SUPPRESS. UNIT K-3) ADDED NOTE J-1) ADDED C PURPLE WIRES
3. 5-14-63 EO 7684-501 ADDED LINEAR TACH. OPTION (B-6)
2. 1-30-63 E.O. 2383 DWG WAS CL. 2 H-4) ADDED ".1 MFD" K12) "G" WAS "F" & "F" WAS "G" REM'D MDA, INSPECTION & MOTOR LEAD NOTES
1. 5-22-62 FORM NO F-2110-9 ER 7380-46

ISSUE NO. | APP.
APPROVED | ENGR | DATE 5/2/62 | SECT HEAD | DATE 5-27-62

a b c d e f g h i

NAME INTERNAL WIRING DIAGRAM FOR POWER AND MEASURING SYSTEM FOR 153078 & 154078 ONE SEC HIGH IMPEDANCE HIGH GAIN - CL 1S

LIMITS—ON DIMENSIONS WHERE LIMITS ARE NOT SHOWN USE THE FOLLOWING:- ON ALL DECIMAL DIMENSIONS ± .005 ON ALL OTHER LINEAR DIMENSIONS ± 1/64 ANGULAR DIMENSIONS ± 1°

SCALE — | JOB NO. 7380 | USED ON | REFERENCE 368275 | DRAWN C.O. 4-17-62 | ENGR | CHECKED 5-22-62 | MAT. CHK | REPRODUCTION LOCATED AT M-H, TORONTO, LONDON, FALL RIVER, GERMANY, TOKYO

SPEC NO. | MATERIAL | FINISH

MINNEAPOLIS-HONEYWELL REG. CO. BROWN INSTRUMENTS DIVISION PHILADELPHIA, PA., U.S.A. MP

SIZE C | DRAWING NO. 369599 | CL. 3

J. H. WEIL CO., PHILA., PA.

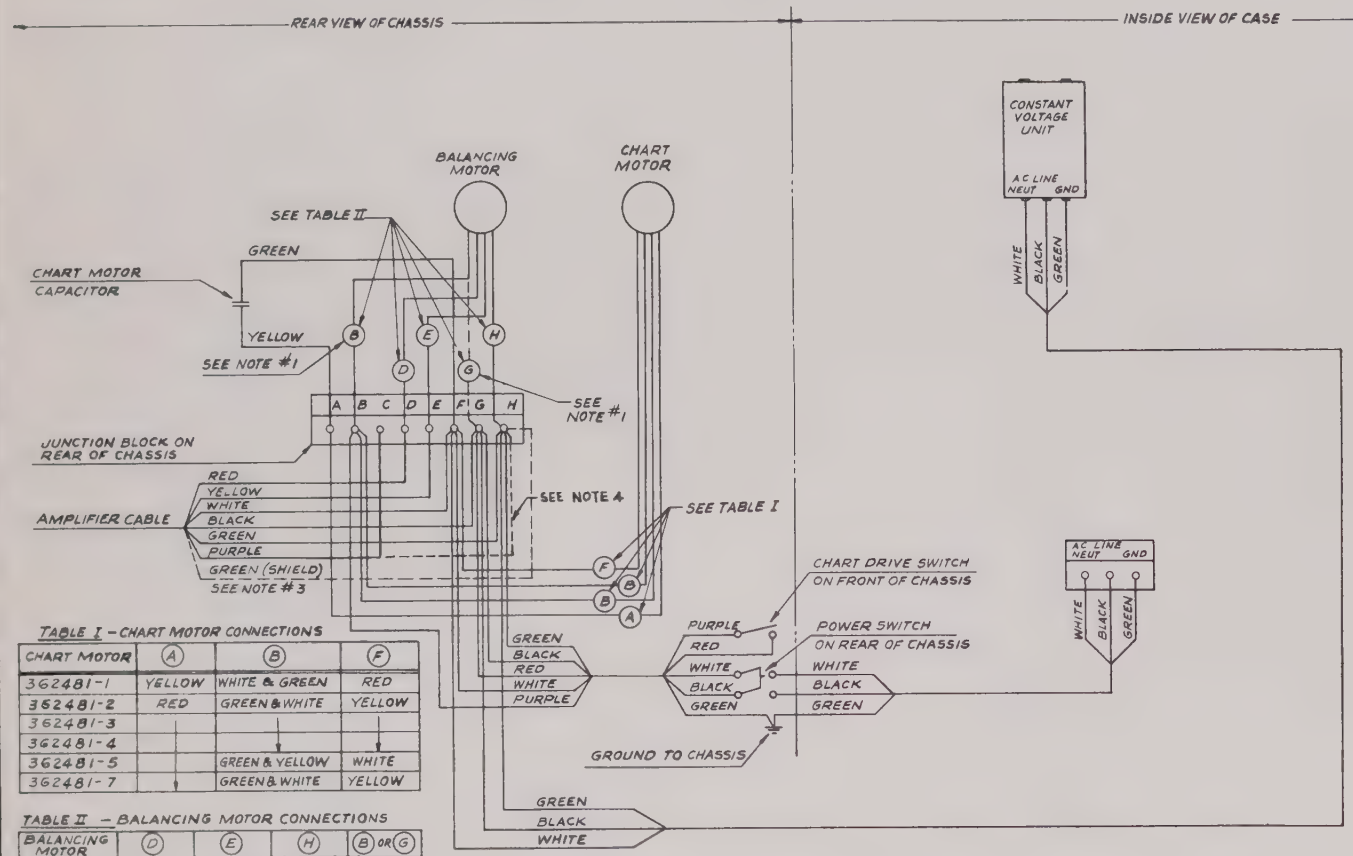


TABLE I – CHART MOTOR CONNECTIONS

| CHART MOTOR | (A) | (B) | (F) |
|---|---|---|---|
| 362481-1 | YELLOW | WHITE & GREEN | RED |
| 362481-2 | RED | GREEN & WHITE | YELLOW |
| 362481-3 | | | |
| 362481-4 | | | |
| 362481-5 | | GREEN & YELLOW | WHITE |
| 362481-7 | | GREEN & WHITE | YELLOW |

TABLE II – BALANCING MOTOR CONNECTIONS

| BALANCING MOTOR | (D) | (E) | (H) | (B) OR (G) |
|---|---|---|---|---|
| 369479-1 | RED | WHITE | GREEN | YELLOW |
| 369479-2 | | YELLOW | | WHITE |
| 369479-3 | | | | |
| 369479-4 | | | | |
| 369479-5 | | | | |

TABLE III – SUPPLEMENTARY DRAWINGS

| TABLE VII OPTION | DWG. NO. |
|---|---|
| CHART ILLUMINATION (061;062) | 363271 |
| D.P.D.T. AUXILIARY SWITCH (096) | 363497 |
| S.P.D.T. AUXILIARY SWITCH (092;097) | 363498 |
| S.P.D.T. AUXILIARY SWITCH (091;094;095) | 369864 |
| OPERATION PENS (026 TO 037) | 363499 |
| OMISSION OF POWER AND CHART SWITCHES (017;019;023;025) | 369870 |
| 240 VOLT OPERATION (018;024) | 363501 |
| FILTER CAPACITORS | 363500 ← NOT A TABLE VII OPTION |
| 2 SPEED CHART DRIVE WITH CH. SW. (009;010;011;012) | 369862 |
| 2 SPEED CHART DRIVE WITHOUT CHART SWITCH (013) | 369863 |

NOTES:-

1. CHOOSE ONE CONNECTION ONLY; CONNECT SINGLE RECORD INSTRUMENTS AND MULTI-RECORD CONTROLLERS TO "B"; CONNECT MULTI-RECORD NON-CONTROLLERS TO "G."
2. IF THE BALANCING MOTOR IS CONNECTED TO TERMINAL "B", CHART DRIVE SWITCH TURNS OFF CHART AS WELL AS BALANCING MOTOR – THIS IS "STAND BY OPERATION." IF BALANCING MOTOR IS CONNECTED TO TERMINAL "G", CHART DRIVE SWITCH DOES NOT AFFECT BALANCING MOTOR OPERATION AND WITH CHART DRIVE SWITCH IN OFF POSITION INSTRUMENT OPERATES AS AN INDICATOR.
3. IF AMPLIFIER CABLE IS PROVIDED WITH SHIELD WIRE, CONNECT THE GREEN SHIELD WIRE TO TERMINAL "H" AS SHOWN BY DOTTED LINES.
4. WHEN AN AMPLIFIER WITHOUT BURNOUT SWITCH IS USED CONNECT PURPLE AMPLIFIER LEAD TO GROUND TERMINAL "H".

8-5-63 EO 2530
(E-2) REMOVED NOTE;
(E-5) PURPLE WIRE TO "H" WAS SOLID NOW DOT
(E-4) PURPLE WIRE TO "C" WAS DOTTED
NOTE 5) NOTE 4 WAS REVISED
1. 1-7-65
Form No P-2148-A 2223
ISSUE NO.
APP. FOR RELEASE ENGR. Bradley 1-4-63 SECT HD DATE
APP. FOR VENDORS QUOTATION ENGR. DATE SECT HD DATE
a b c d e f g h i
TOKYO ✓ SERVICE ✓
M-H
TORONTO ✓
2223
REPRODUCTION LOCATED AT JOB NOS USED ON
LIMITS—ON DIMENSIONS WHERE LIMITS ARE NOT SHOWN USE THE FOLLOWING:—
ON ALL DECIMAL DIMENSIONS ± .005
ON ALL OTHER LINEAR DIMENSIONS ±1/64
ANGULAR DIMENSIONS ± 1°
DES ENGR. DRAWN MG CHECKED WLM APPROVED

WIRING DIAGRAM-INTERNAL INSTRUMENT POWER CIRCUIT CL. 15 SINGLE AND MULTI-RECORD STRIP CHART REC. WITHOUT DESENSITIZING

MINNEAPOLIS-HONEYWELL REG. CO.
BROWN INSTRUMENTS DIVISION
PHILADELPHIA PA. U.S.A. MP

SCALE NONE DRAWING NO. 369854 CL 3
DATE 12-15-62

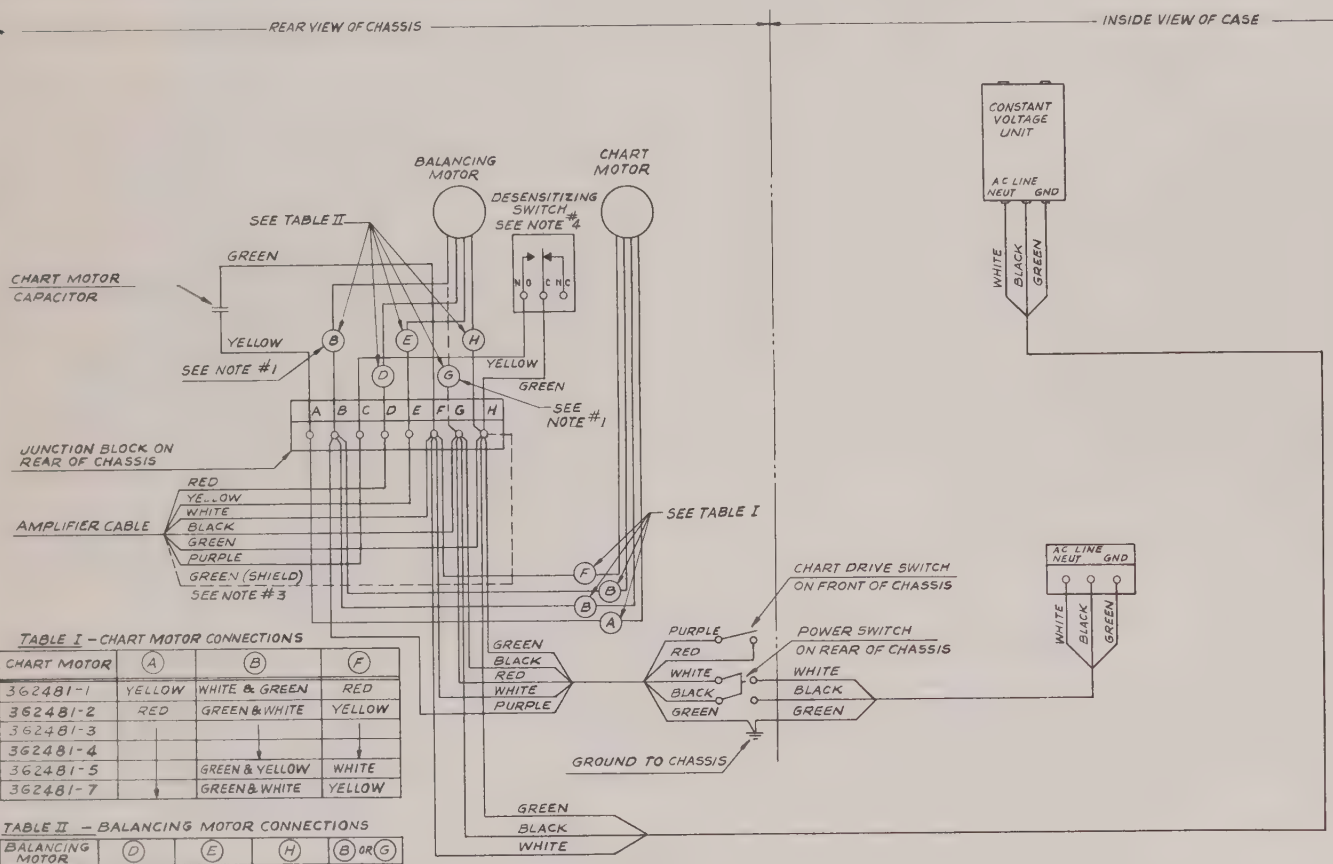


TABLE I – CHART MOTOR CONNECTIONS

| CHART MOTOR | (A) | (B) | (F) |
|---|---|---|---|
| 362481-1 | YELLOW | WHITE & GREEN | RED |
| 362481-2 | RED | GREEN & WHITE | YELLOW |
| 362481-3 | | | |
| 362481-4 | | | |
| 362481-5 | | GREEN & YELLOW | WHITE |
| 362481-7 | | GREEN & WHITE | YELLOW |

TABLE II – BALANCING MOTOR CONNECTIONS

| BALANCING MOTOR | (D) | (E) | (H) | (B) OR (G) |
|---|---|---|---|---|
| 369479-1 | RED | WHITE | GREEN | YELLOW |
| 369479-2 | | YELLOW | | WHITE |
| 369479-3 | | | | |
| 369479-4 | | | | |
| 369479-5 | | | | |

TABLE III – SUPPLEMENTARY DRAWINGS

| TABLE VIII OPTION | DWG. NO. |
|---|---|
| CHART ILLUMINATION (061;062) | 363271 |
| D.P.D.T. AUXILIARY SWITCH (096) | 363497 |
| S.P.D.T. AUXILIARY SWITCH (092;097) | 363498 |
| S.P.D.T. AUXILIARY SWITCH (091;094;095) | 369864 |
| OPERATION PENS (026 TO 037) | 363499 |
| OMISSIOM OF POWER AND CHART SWITCHES (017;019;023;025) | 369870 |
| 240 VOLT OPERATION (018;024) | 363501 |
| FILTER CAPACITORS | 363500 — NOT A TABLE VII OPTION |
| 2 SPEED CHART DRIVE WITH CH. SW. (009;010;011;012) | 369862 |
| 2 SPEED CHART DRIVE WITHOUT CHART SWITCH (013) | 369863 |

NOTES:-

1.- CHOOSE ONE CONNECTION ONLY; CONNECT SINGLE RECORD INSTRUMENTS AND MULTI-RECORD CONTROLLERS TO "B"; CONNECT MULTI-RECORD NON-CONTROLLERS TO "G."

2.- IF THE BALANCING MOTOR IS CONNECTED TO TERMINAL "B", CHART DRIVE SWITCH TURNS OFF CHART AS WELL AS BALANCING MOTOR - THIS IS "STAND BY OPERATION." IF BALANCING MOTOR IS CONNECTED TO TERMINAL "G", CHART DRIVE SWITCH DOES NOT AFFECT BALANCING MOTOR OPERATION AND WITH CHART DRIVE SWITCH IN OFF POSITION INSTRUMENT OPERATES AS AN INDICATOR.

3.- IF AMPLIFIER CABLE IS PROVIDED WITH SHIELD WIRE, CONNECT THE GREEN SHIELD WIRE TO TERMINAL "H" AS SHOWN BY DOTTED LINES.

4.- INSTRUMENT IS DESENSITIZED WITH SWITCH IN OPEN POSITION.

Form No. F-2148-A 1-7-63 2223 WLM

ISSUE NO. APP.

APP. FOR RELEASE — ENGR. DATE 1-4-63; MGR. DATE

APP. FOR VENDORS QUOTATION — SECT. HD. DATE

| a | b | c | d | e | f | g | h | i | j |
|---|---|---|---|---|---|---|---|---|---|
| TOKYO | ✓ | REVISED ✓ | | | | | | | |
| M-H | | | | | | | | | |
| TORONTO | ✓ | | | | | | | | |
| | | | | | 2223 | | | | |

REPRODUCTION LOCATED AT — JOB NOS. 2223 — USED ON

LIMITS—ON DIMENSIONS WHERE LIMITS ARE NOT SHOWN USE THE FOLLOWING — ON ALL DECIMAL DIMENSIONS ± .005 ON ALL OTHER LINEAR DIMENSIONS ± 1/64 ANGULAR DIMENSIONS ± 1°

| DES. ENGR | DRAWN MG | CHECKED WLM | APPROVED |
|---|---|---|---|

WIRING DIAGRAM - INTERNAL INSTRUMENT POWER CIRCUIT CL. 15 SINGLE AND MULTI-RECORD STRIP CHART RECORDER WITH DESENSITIZING

MINNEAPOLIS-HONEYWELL REG. CO.
BROWN INSTRUMENTS DIVISION
PHILADELPHIA, PA., U. S. A. MP

| SCALE | DRAWING NO. | CL. |
|---|---|---|
| NONE | 369855 | 3 |
| DATE 12-15-62 | | |

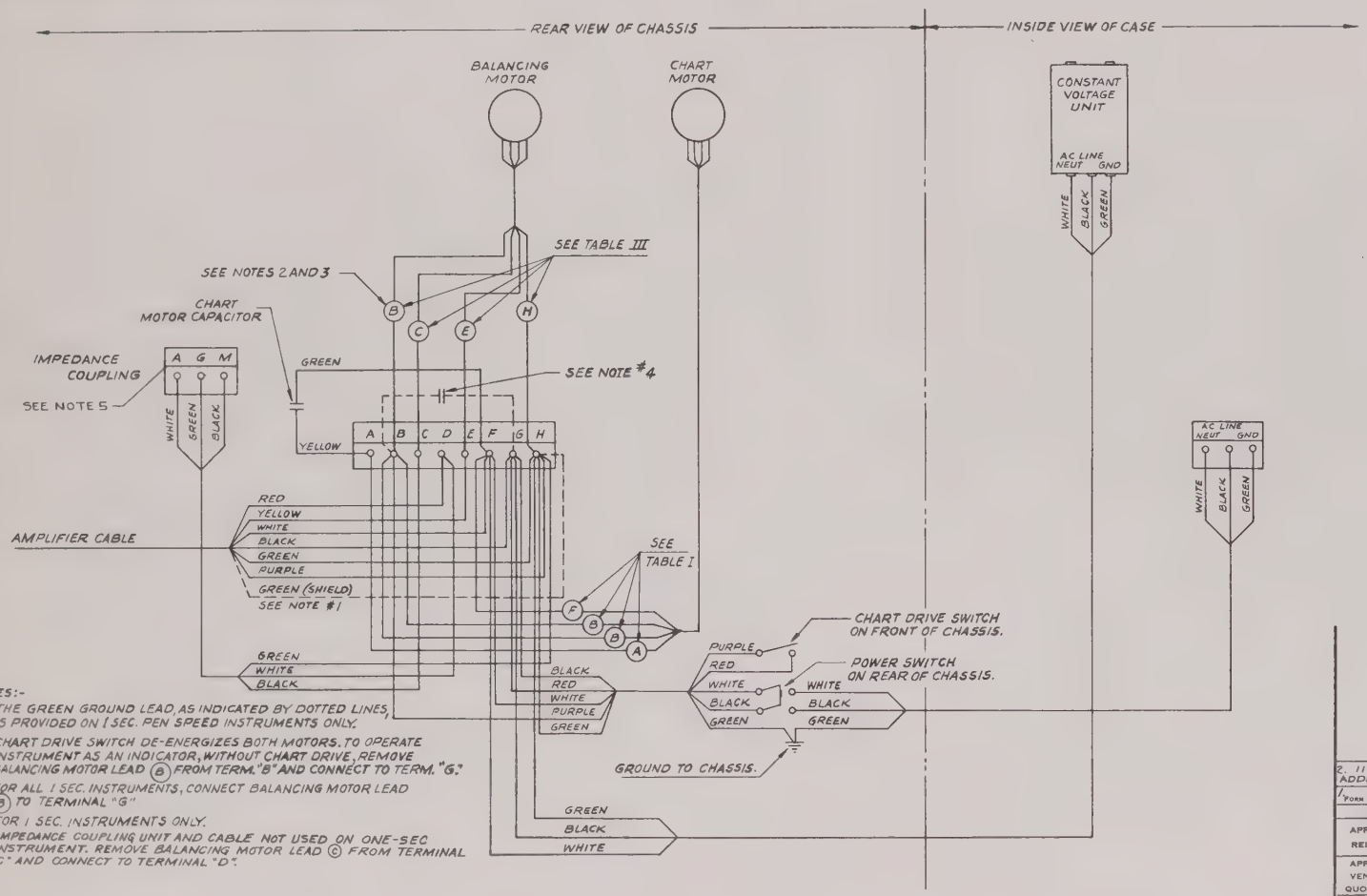


NOTES:-

1.- THE GREEN GROUND LEAD, AS INDICATED BY DOTTED LINES, IS PROVIDED ON 1 SEC. PEN SPEED INSTRUMENTS ONLY.

2.- CHART DRIVE SWITCH DE-ENERGIZES BOTH MOTORS. TO OPERATE INSTRUMENT AS AN INDICATOR, WITHOUT CHART DRIVE, REMOVE BALANCING MOTOR LEAD (B) FROM TERM. "B" AND CONNECT TO TERM. "G."

3.- FOR ALL 1 SEC. INSTRUMENTS, CONNECT BALANCING MOTOR LEAD (B) TO TERMINAL "G"

4.- FOR 1 SEC. INSTRUMENTS ONLY.

5.- IMPEDANCE COUPLING UNIT AND CABLE NOT USED ON ONE-SEC INSTRUMENT. REMOVE BALANCING MOTOR LEAD (C) FROM TERMINAL "C" AND CONNECT TO TERMINAL "D".

TABLE I CHART MOTOR CONNECTIONS

| CHART MOTOR | (A) | (B) | (F) |
|---|---|---|---|
| 362481-1 | YELLOW | WHITE & GREEN | RED |
| 362481-2 | RED | GREEN & WHITE | YELLOW |
| 362481-3 | RED | GREEN & WHITE | YELLOW |
| 362481-7 | RED | GREEN & WHITE | YELLOW |

TABLE II SUPPLEMENTARY DRAWINGS

| TABLE VII OPTION | DWG. NO. |
|---|---|
| CHART ILLUMINATION (061; 062) | 363271 |
| D.P.D.T. AUXILIARY SWITCH (096) | 363497 |
| S.P.D.T. AUXILIARY SWITCH (092; 097) | 363498 |
| OPERATION PENS (026 TO 037) | 363499 |
| 240 VOLT OPERATION (018; 024) | 363501 |
| FILTER CAPACITORS | 363500 |
| 2 SPEED CH. DRIVE WITH CH. SWITCH (009; 010; 011; 012) | 369862 |
| 2 SPEED CH. DRIVE WITHOUT CH. SWITCH (013) | 369863 |
| OMISSION OF POWER AND CHART SWITCHES (017; 019; 023; 025) | 369870 |

← NOT PART OF TABLE VII OPTION

TABLE III BALANCING MOTOR CONNECTIONS

| BALANCING MOTOR | (B) | (C) | (E) | (H) |
|---|---|---|---|---|
| 362479-8 | YELLOW | RED | WHITE | GREEN |
| 362480-1 | WHITE | RED | YELLOW | GREEN |

2. 11-27-63 EO-2596 ADDED NOTE 5

1. 1-7-63 2223 WLM

FORM NO. F-2148-A

ISSUE NO. APP.

APP. FOR RELEASE — ENGR. — DATE 1-4-63 — SECT. NO. — DATE

APP. FOR VENDORS QUOTATION — ENGR. — DATE — SECT. HD — DATE

| a | b | c | d | e | f | g | h | j |
|---|---|---|---|---|---|---|---|---|
| TOKYO | ✓ | NEW HOUSE ✓ | | | | | | |
| M H | | | | | | | | |
| TORONTO | ✓ | | | | | | | |

REPRODUCTION LOCATED AT — JOB NOS. 2223 — USED ON

LIMITS—ON DIMENSIONS WHERE LIMITS ARE NOT SHOWN USE THE FOLLOWING:—
ON ALL DECIMAL DIMENSIONS ± .005
ON ALL OTHER LINEAR DIMENSIONS ±1/64
ANGULAR DIMENSIONS ± 1°

DES. ENGR. — DRAWN MG — CHECKED WLM — APPROVED

WIRING DIAGRAM - INTERNAL INSTRUMENT POWER CIRCUIT CL 15 SINGLE REC. ST. CH. 1 AND 2 SEC. PEN SPEED WITHOUT DESENSITIZING

MINNEAPOLIS-HONEYWELL REG. CO.
BROWN INSTRUMENTS DIVISION
PHILADELPHIA, PA., U. S. A. MP

SCALE NONE — DATE 12-17-62 — DRAWING NO 369856 — CL. 3

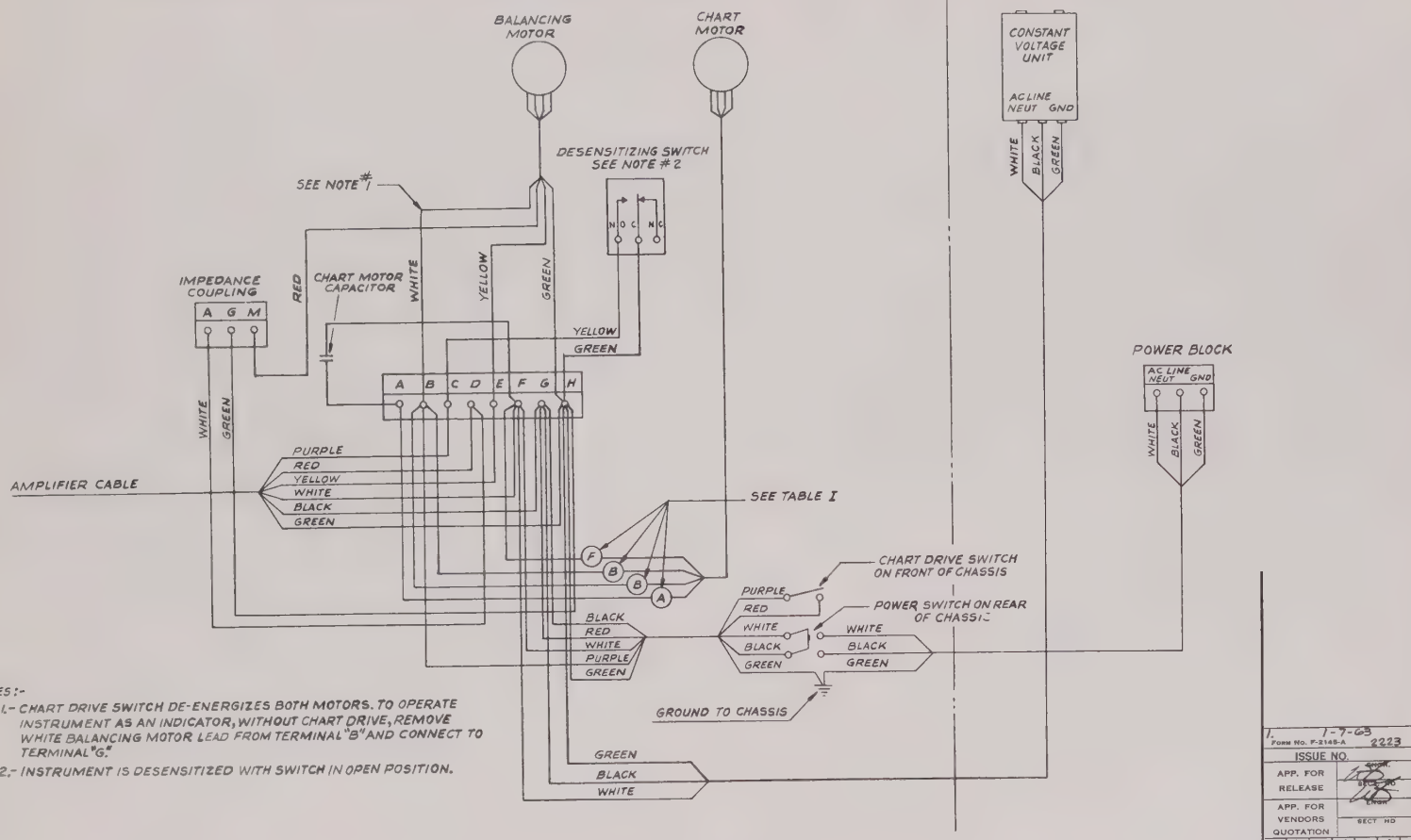


NOTES:-

1.- CHART DRIVE SWITCH DE-ENERGIZES BOTH MOTORS. TO OPERATE INSTRUMENT AS AN INDICATOR, WITHOUT CHART DRIVE, REMOVE WHITE BALANCING MOTOR LEAD FROM TERMINAL "B" AND CONNECT TO TERMINAL "G."

2.- INSTRUMENT IS DESENSITIZED WITH SWITCH IN OPEN POSITION.

TABLE I - CHART MOTOR CONNECTIONS

| CHART MOTOR | (A) | (B) | (F) |
|---|---|---|---|
| 362481-1 | YELLOW | WHITE & GREEN | RED |
| 362481-2 | RED | GREEN & WHITE | YELLOW |
| 362481-3 | RED | | YELLOW |
| 362481-7 | RED | | YELLOW |

TABLE - II SUPPLEMENTARY DRAWINGS

| TABLE VII OPTION | DWG. NO. |
|---|---|
| CHART ILLUMINATION (061;062) | 363271 |
| S.P.D.T. AUXILIARY SWITCH (092;097) | 363498 |
| OPERATION PENS (026 TO 037) | 363499 |
| OMISSION OF POWER AND CHART SWITCHES (017;019;023;025) | 369870 |
| NOT A TABLE VII OPTION → FILTER CAPACITORS | 363500 |
| 2 SPEED CH. DRIVE WITH CH. SW. (009;010;011;012) | 369862 |
| 2 SPEED CH. DRIVE WITHOUT CH. SWITCH (013) | 369863 |
| D.P.D.T. AUXILIARY SWITCH (096) | 363497 |
| 240 VOLT OPERATION (024;018) | 363501 |

1 1-7-63 WLH
Form No. F-2145-A 2223 APP
ISSUE NO.
APP. FOR RELEASE — DATE 1-8-63
APP. FOR VENDORS QUOTATION — SECT HD — DATE
a b c d e f g h i
TOKYO ✓ NEWNOSS ✓
M-H
TORONTO ✓
2223
REPRODUCTION LOCATED AT — JOB NOS — USED ON

LIMITS—ON DIMENSIONS WHERE LIMITS ARE NOT SHOWN USE THE FOLLOWING — ON ALL DECIMAL DIMENSIONS ± .005 ON ALL OTHER LINEAR DIMENSIONS ± 1/64 ANGULAR DIMENSIONS ± 1°

DES ENGR — DRAWN MP — CHECKED WLH — APPROVED

# WIRING DIAGRAM - INTERNAL INSTRUMENT POWER CIRCUIT CL. 15 SINGLE REC. ST. CH. 2 SEC. PEN SPEED WITH DESENSITIZING

MINNEAPOLIS-HONEYWELL REG. CO.
BROWN INSTRUMENTS DIVISION
PHILADELPHIA, PA., U.S.A.

SCALE NONE — DRAWING NO 369857 — SH 3
DATE 12-15-62

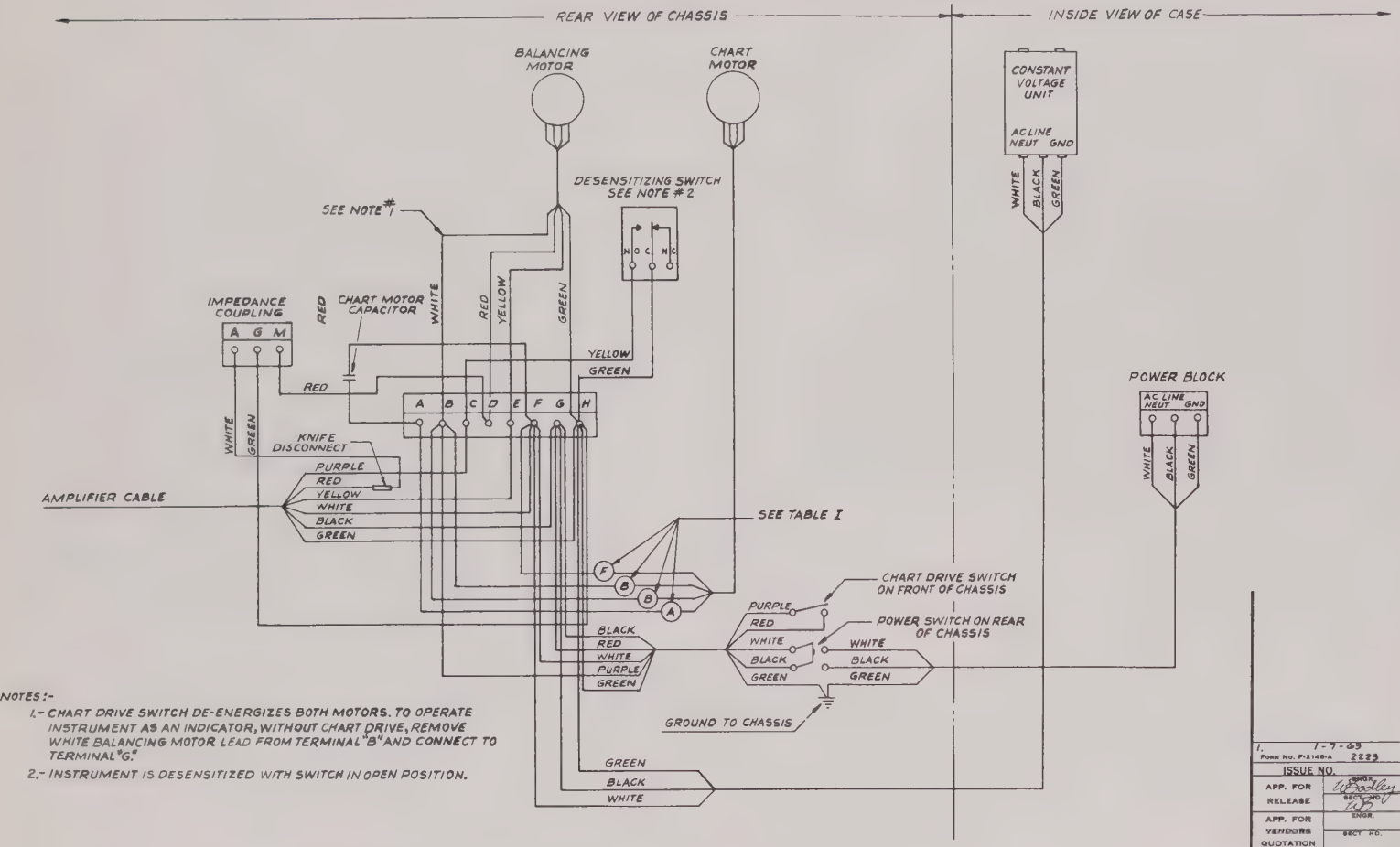


NOTES:-

1.- CHART DRIVE SWITCH DE-ENERGIZES BOTH MOTORS. TO OPERATE INSTRUMENT AS AN INDICATOR, WITHOUT CHART DRIVE, REMOVE WHITE BALANCING MOTOR LEAD FROM TERMINAL "B" AND CONNECT TO TERMINAL "G."

2.- INSTRUMENT IS DESENSITIZED WITH SWITCH IN OPEN POSITION.

TABLE I - CHART MOTOR CONNECTIONS

| CHART MOTOR | (A) | (B) | (F) |
|---|---|---|---|
| 362481-1 | YELLOW | WHITE & GREEN | RED |
| 362481-2 | RED | GREEN & WHITE | YELLOW |
| 362481-3 | RED | | YELLOW |
| 362481-7 | RED | | YELLOW |

TABLE - II SUPPLEMENTARY DRAWINGS

| TABLE VII OPTION | DWG. NO. |
|---|---|
| CHART ILLUMINATION (061;062) | 363271 |
| S.P.D.T. AUXILIARY SWITCH (092;097) | 363498 |
| OPERATION PENS (026 TO 037) | 363499 |
| OMISSION OF POWER AND CHART SWITCHES (017;019;023;025) | 369870 |
| NOT A TABLE VII OPTION → FILTER CAPACITORS | 363500 |
| 2 SPEED CH. DRIVE WITH CH. SW. (009;010;011;012) | 369862 |
| 2 SPEED CH. DRIVE WITHOUT CH. SWITCH (013) | 369863 |

| | | |
|---|---|---|
| 1. 1-7-63 FORM NO. F-2145-A 2223 | | WLM |
| ISSUE NO. | | APP. |
| APP. FOR RELEASE | ENGR. W. Bodley SECT. NO. WB | DATE 1-4-63 DATE |
| APP. FOR VENDORS QUOTATION | ENGR. SECT. NO. | DATE DATE |

| a | b | c | d | e | f | g | h | i |
|---|---|---|---|---|---|---|---|---|
| TOKYO M-H | | ✓ | NEWHOUSE | ✓ | | | | |
| TORONTO | | ✓ | | | | | | |
| [redacted] | | | | | 2223 | | | |
| REPRODUCTION LOCATED AT | | | | | JOB NOS | | USED ON | |

LIMITS—ON DIMENSIONS WHERE LIMITS ARE NOT SHOWN USE THE FOLLOWING —
ON ALL DECIMAL DIMENSIONS ± .005
ON ALL OTHER LINEAR DIMENSIONS ±1/64
ANGULAR DIMENSIONS ± 1°

| DES. ENGR. | DRAWN | CHECKED | APPROVED |
|---|---|---|---|
| | MJ | WLM | |

WIRING DIAGRAM - INTERNAL INSTRUMENT POWER CIRCUIT CL. 15 SINGLE REC. ST. CH. 2 SEC. PEN SPEED WITH DESENSITIZING. RELAY RACK MTD.

MINNEAPOLIS-HONEYWELL REG. CO.
BROWN INSTRUMENTS DIVISION
PHILADELPHIA PA U S A MP

| SCALE | DRAWING NO | CL. |
|---|---|---|
| NONE | 369858 | 3 |
| DATE 12-15-62 | | |

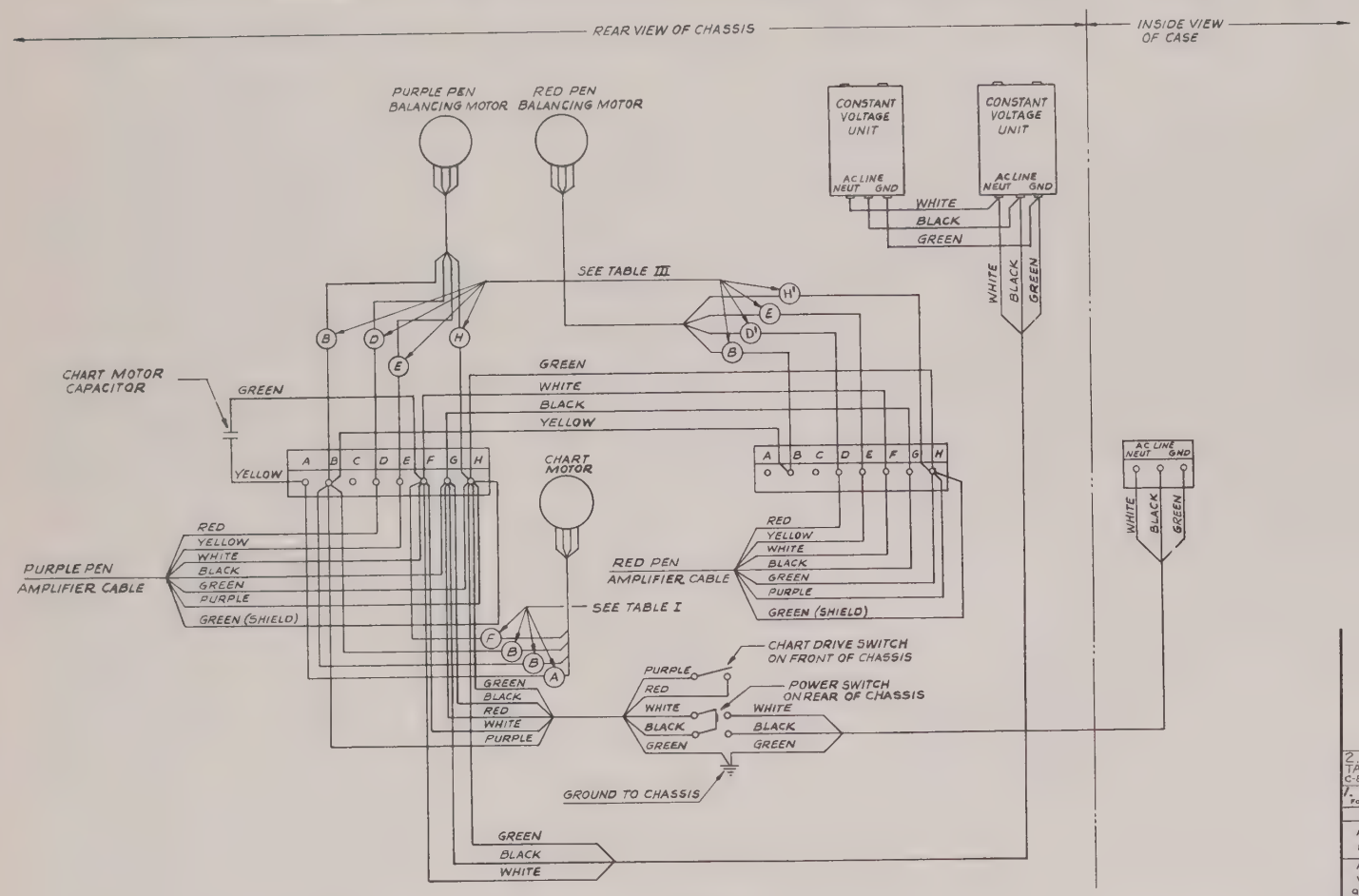


TABLE I - CHART MOTOR CONNECTIONS

| CHART MOTOR | (A) | (B) | (F) |
|---|---|---|---|
| 362481-1 | YELLOW | WHITE & GREEN | RED |
| 362481-2 | RED | GREEN & WHITE | YELLOW |
| 362481-3 | RED | ↓ | YELLOW |
| 362481-7 | RED | ↓ | YELLOW |

TABLE II - SUPPLEMENTARY DRAWINGS

| TABLE VII OPTION | DWG. NO. |
|---|---|
| CHART ILLUMINATION (061; 062) | 363271 |
| OPERATION PENS (026 TO 037) | 363499 |
| FILTER CAPACITORS * | 363500 |

*NOT A TABLE VII OPTION

TABLE III - BALANCING MOTOR CONNECTIONS

| BALANCING MOTOR | (B) | (D) | (E) | (H) | (D') | (H') |
|---|---|---|---|---|---|---|
| 362479-1 | YELLOW | RED | WHITE | GREEN | GREEN | RED |
| 362479-2 | WHITE | RED | YELLOW | GREEN | " | " |
| 362479-3 | WHITE | RED | YELLOW | GREEN | " | " |
| 362480-1 | WHITE | RED | YELLOW | GREEN | " | " |
| 362479-8 | YELLOW | RED | WHITE | GREEN | " | " |

2. 8-26-63 EO 2537 TABLE) ADD. COLUMNS D' & H' C-8) D' & H' WAS D & H

1. 1-7-63 WLM

FORM NO. F-2145-A 2223

ISSUE NO. APP.

APP. FOR RELEASE — ENGR. — DATE 1-4-63 — ENGR. NO. — DATE

APP. FOR VENDORS QUOTATION — ENGR — DATE — SECT HD — DATE

| a | b | c | d | e | f | g | h | i |
|---|---|---|---|---|---|---|---|---|
| TOKYO M-H | ✓ | NEW HOUSE | ✓ | | | | | |
| TORONTO | ✓ | | | | | | | |
| [redacted] | | | | | 2223 | | | |

REPRODUCTION LOCATED AT — JOB NOS. — USED ON

LIMITS—ON DIMENSIONS WHERE LIMITS ARE NOT SHOWN USE THE FOLLOWING.—
ON ALL DECIMAL DIMENSIONS ± .005
ON ALL OTHER LINEAR DIMENSIONS ± 1/64
ANGULAR DIMENSIONS ± 1°

DES ENGR — DRAWN MG — CHECKED WLM — APPROVED

WIRING DIAGRAM - INTERNAL
INTERNAL POWER CIRCUIT
CL. 15 TWO PEN STRIP CHART INSTRUMENTS

MINNEAPOLIS-HONEYWELL REG. CO.
BROWN INSTRUMENTS DIVISION
PHILADELPHIA, PA., U. S. A. MP

SCALE NONE — DATE 12-15-62 — DRAWING NO. 369859 — CL 3

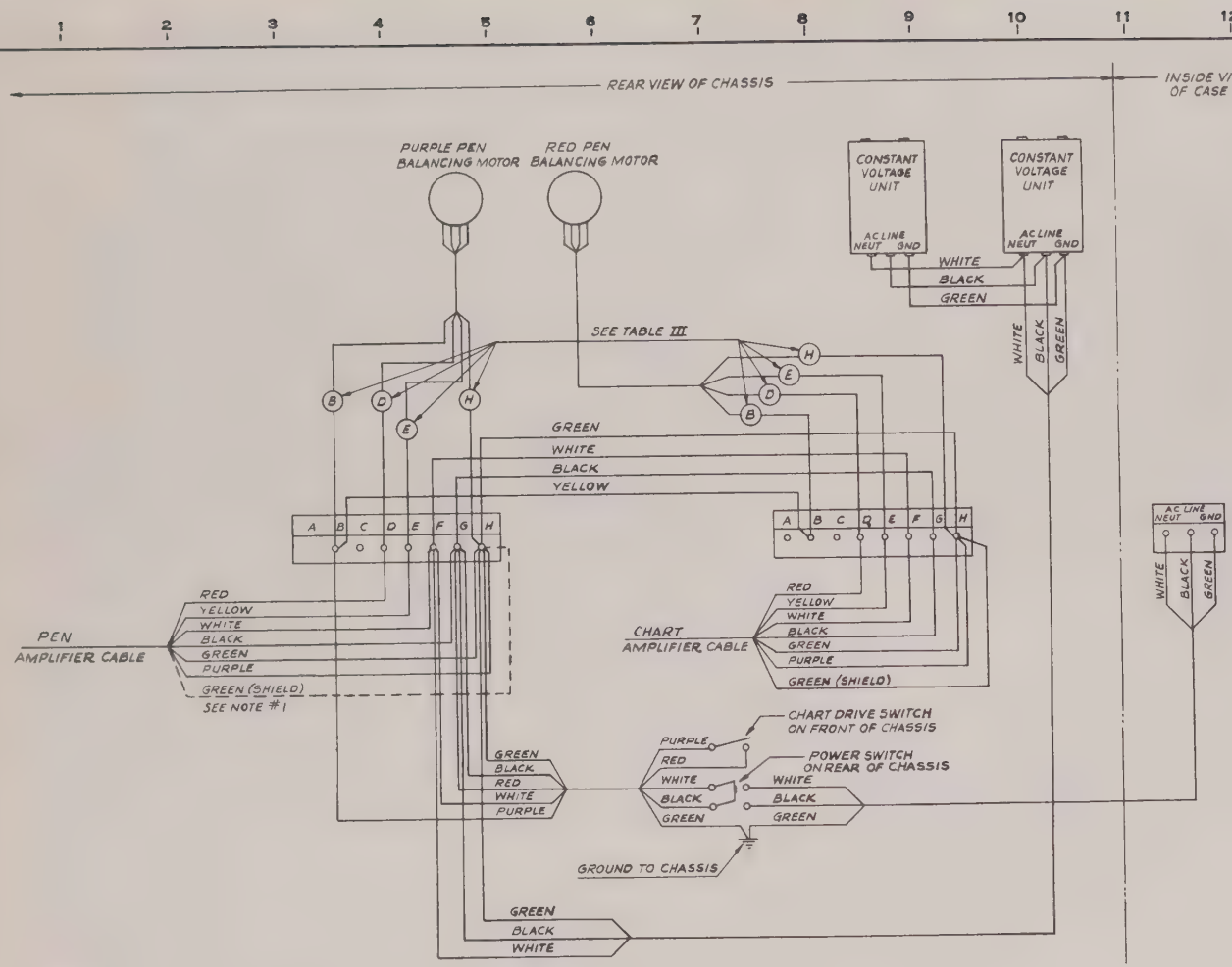


NOTE:-
1. IF AMPLIFIER CABLE IS PROVIDED WITH SHIELD WIRE, CONNECT THE GREEN SHIELD WIRE TO TERMINAL "H", AS SHOWN BY DOTTED LINES.

TABLE III - BALANCING MOTOR CONNECTIONS

| BALANCING MOTOR | (B) | (D) | (E) | (H) |
|---|---|---|---|---|
| 362479-1 | YELLOW | RED | WHITE | GREEN |
| 362479-2 | WHITE | RED | YELLOW | GREEN |
| 362479-3 | WHITE | RED | YELLOW | GREEN |
| 362480-1 | WHITE | RED | YELLOW | GREEN |

1. 1-7-63 WLH
FORM NO. F-2148-A 2223
ISSUE NO. APP.
APP. FOR RELEASE — ENGR. W. Godley — DATE 1-4-63 — SECT. HD — DATE
APP. FOR VENDORS QUOTATION — ENGR — DATE — SECT HD — DATE

| a | b | c | d | e | f | g | h | i |
|---|---|---|---|---|---|---|---|---|
| TOKYO | ✓ | NEWHOUSE | | ✓ | | | | |
| M-H | | | | | | | | |
| TORONTO | ✓ | | | | | | | |
| [redacted] | | | | | 2223 | | | |

REPRODUCTION LOCATED AT — JOB NOS — USED ON

LIMITS—ON DIMENSIONS WHERE LIMITS ARE NOT SHOWN USE THE FOLLOWING
ON ALL DECIMAL DIMENSIONS ± .005
ON ALL OTHER LINEAR DIMENSIONS ± 1/64
ANGULAR DIMENSIONS ± 1°

DES ENGR. — DRAWN MG — CHECKED WLH — APPROVED

WIRING DIAGRAM-INTERNAL
INTERNAL POWER CIRCUIT
CL 15 STRIP CHART
FUNCTION PLOTTER

MINNEAPOLIS-HONEYWELL REG. CO.
BROWN INSTRUMENTS DIVISION
PHILADELPHIA PA. U. S. A. MP

SCALE NONE — DATE 12-15-62 — DRAWING NO 369860 — CL. 3

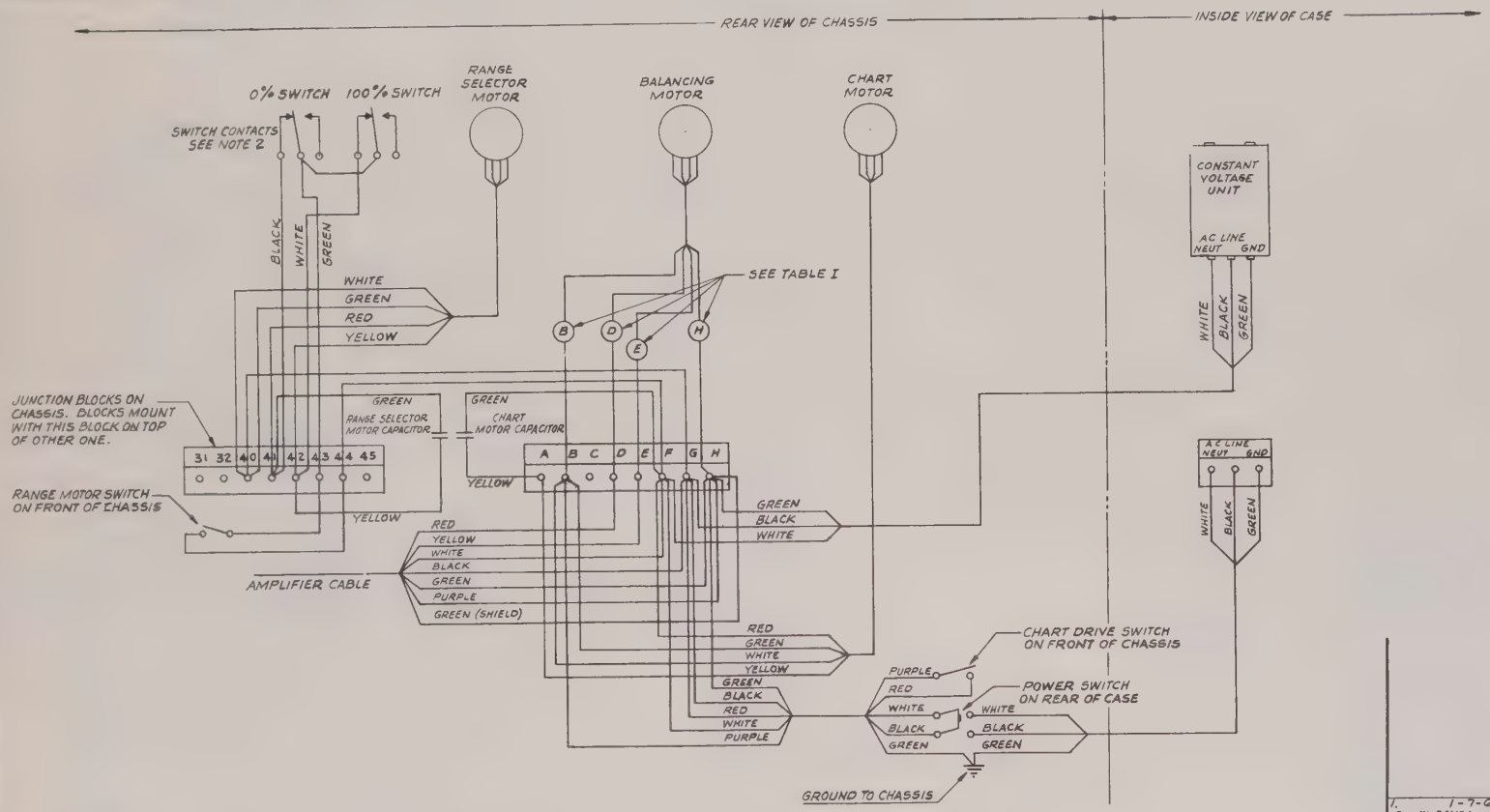


NOTES:-

1.- CHART DRIVE SWITCH DE-ENERGIZES BOTH MOTORS. TO OPERATE INSTRUMENT AS AN INDICATOR, WITHOUT CHART DRIVE, REMOVE BALANCING MOTOR LEAD (B) FROM TERMINAL "B" AND CONNECT TO TERMINAL "G."

2.- SWITCH CONTACTS ARE NORMALLY OPEN (ACTUATOR IN FREE POSITION.) CONTACTS ARE KEPT CLOSED BY CAM EXCEPT DURING RANGE CHANGING.

TABLE I - BALANCING MOTOR CONNECTIONS

| BALANCING MOTOR | (B) | (D) | (E) | (H) |
|---|---|---|---|---|
| 362479-1 | YELLOW | RED | WHITE | GREEN |
| 362480-1 | WHITE | RED | YELLOW | GREEN |

1. 1-7-63 WLM
FORM NO. F-2148-A 2223
ISSUE NO. APP.
APP. FOR RELEASE — ENGR. — DATE 1-4-63 — SECT. HD. — DATE
APP. FOR VENDORS QUOTATION — ENGR. — DATE — SECT HD — DATE

| a | b | c | d | e | f | g | h | i |
|---|---|---|---|---|---|---|---|---|
| TOKYO | ✓ | | NEWHOUSE | ✓ | | | | |
| M-H | | | | | | | | |
| TORONTO | ✓ | | | | | | | |
| [redacted] | | | | | 2223 | | | |

REPRODUCTION LOCATED AT — JOB NOS. — USED ON

LIMITS—ON DIMENSIONS WHERE LIMITS ARE NOT SHOWN USE THE FOLLOWING —
ON ALL DECIMAL DIMENSIONS ± .005
ON ALL OTHER LINEAR DIMENSIONS ± 1/64
ANGULAR DIMENSIONS ± 1°

DES. ENGR. — DRAWN — CHECKED WLM — APPROVED

WIRING DIAGRAM-INTERNAL
INSTRUMENT POWER CIRCUIT
CL 15 SINGLE RECORD ST. CH.
EXTENDED RANGE

MINNEAPOLIS-HONEYWELL REG. CO.
BROWN INSTRUMENTS DIVISION
PHILADELPHIA, PA., U. S. A. MP

SCALE NONE — DATE 12-17-62 — DRAWING NO 369861 — CL. 3

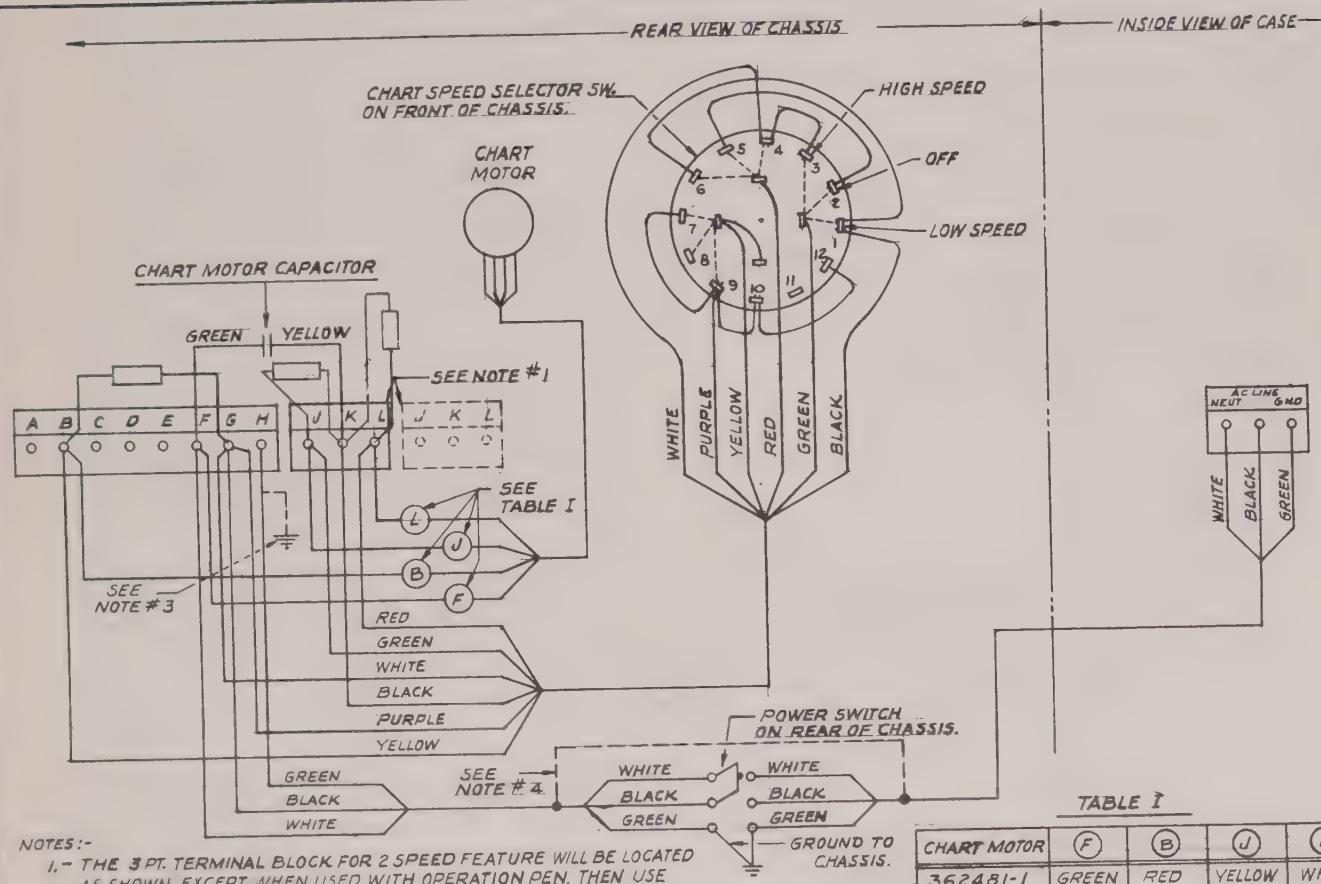


NOTES:-

1.- THE 3 PT. TERMINAL BLOCK FOR 2 SPEED FEATURE WILL BE LOCATED AS SHOWN, EXCEPT, WHEN USED WITH OPERATION PEN. THEN USE LOCATION SHOWN IN DOTTED LINES.

2.- REMAINDER OF WIRING TO BE IN ACCORDANCE WITH STANDARD WIRING DIAGRAM FOR MODEL NO SELECTED FROM 5-8073-C.

3.- ON MODEL 1530187, GROUND GREEN LEAD DIRECTLY TO CHASSIS. DO NOT CONNECT TO TERMINAL "H."

4.- IF TABLE VII OPTION OF (OMISSION OF POWER SWITCH) IS SPECIFIED- MAKE CONNECTIONS AS INDICATED BY DOTTED LINES.

TABLE I

| CHART MOTOR | (F) | (B) | (J) | (L) |
|---|---|---|---|---|
| 362481-1 | GREEN | RED | YELLOW | WHITE |
| 362481-2 | WHITE | YELLOW | RED | GREEN |
| 362481-3 | ↓ | ↓ | ↓ | ↓ |
| 362481-4 | ↓ | ↓ | ↓ | ↓ |
| 362481-5 | YELLOW | WHITE | ↓ | ↓ |
| 362481-7 | WHITE | YELLOW | ↓ | ↓ |

3. 12-5-63 EO 2680
D-3) 'B' WAS 'G', WIRE WAS CONNECTED TO TERM. G (ITEM TABLE) 'B' WAS 'G'
C-1) ADDED ARC SUPP. UNIT TO TERMINALS "B" AND "G".
A-6) ADDED JUMPERS TO SWITCH.

2. 8-14-63 EO 7684-4P
C-4) ADDED ARC SUPPRESSOR UNITS
NOTE 4 WAS NOTE 5

1. 1-7-63

FORM NO. P-2145-A 2223

ISSUE NO. APP.

| | | | |
|---|---|---|---|
| APP. FOR RELEASE | ENGR. | | DATE 1-4-63 |
| | SECT. HD. | | DATE |
| APP. FOR VENDORS QUOTATION | ENGR. | | DATE |
| | SECT. HD. | | DATE |

| a | b | c | d | e | f | g | h | i |
|---|---|---|---|---|---|---|---|---|
| TOKYO | ✓ | WAREHOUSE | ✓ | | | | | |
| M-H | | | | | | | | |
| TORONTO | ✓ | | | | | | | |

REPRODUCTION LOCATED AT 2223 JOB NOS. USED ON

LIMITS—ON DIMENSIONS WHERE LIMITS ARE NOT SHOWN USE THE FOLLOWING:—
ON ALL DECIMAL DIMENSIONS ± .005
ON ALL OTHER LINEAR DIMENSIONS ±1/64
ANGULAR DIMENSIONS ± 1°

| DES. ENGR. | DRAWN | CHECKED | APPROVED |
|---|---|---|---|
| | MP | WLM | |

# WIRING DIAGRAM-INTERNAL SUPPLEMENTARY WIRING TWO SPEED CHART DRIVE WITH CHART SWITCH CL. 15 STRIP CHART RECORDER

MINNEAPOLIS-HONEYWELL REG. CO.
BROWN INSTRUMENTS DIVISION
PHILADELPHIA, PA., U. S. A. MP

| SCALE | DRAWING NO. | CL. |
|---|---|---|
| NONE | 369862 | 3 |
| DATE 12-18-62 | | |

369862

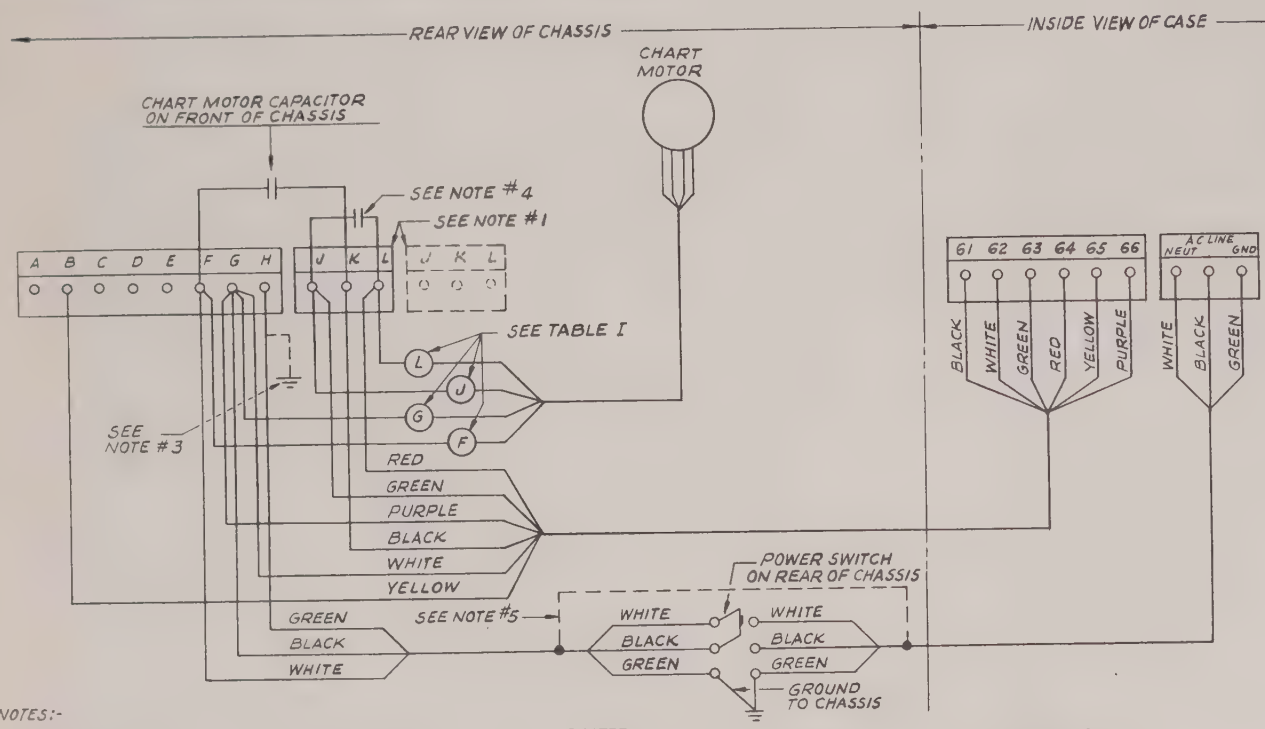


NOTES:-

1.- THE 3 PT. TERMINAL BLOCK FOR 2 SPEED FEATURE WILL BE LOCATED AS SHOWN, EXCEPT, WHEN USED WITH OPERATION PEN. THEN USE LOCATION - IN DOTTED LINES.

2.- REMAINDER OF WIRING TO BE IN ACCORDANCE WITH STANDARD WIRING DIAGRAM FOR MODEL NO. SELECTED

3.- ON MODEL 1530187, GROUND GREEN LEAD DIRECTLY TO CHASSIS. DO NOT CONNECT TO TERMINAL "H"

4.- CHART SWITCH CAPACITOR REQUIRED ONLY ON MODEL 1530187.

5.- IF TABLE VII OPTION OF OMISSION OF POWER SWITCH IS SPECIFIED: MAKE CONNECTIONS AS INDICATED BY DOTTED LINES.

TABLE I

| CHART MOTOR | (F) | (G) | (J) | (L) |
|---|---|---|---|---|
| 362481-1 | GREEN | RED | YELLOW | WHITE |
| 362481-2 | WHITE | YELLOW | RED | GREEN |
| 362481-3 | ↓ | ↓ | ↓ | ↓ |
| 362481-4 | ↓ | ↓ | ↓ | ↓ |
| 362481-5 | YELLOW | WHITE | ↓ | ↓ |
| 362481-7 | WHITE | YELLOW | ↓ | ↓ |

1. 1-7-63 WLM
FORM NO. F-2145-A 2223
ISSUE NO. APP.
APP. FOR RELEASE ENGR. SECT. HD. ENGR. DATE 1-4-63 DATE DATE
APP. FOR VENDORS QUOTATION SECT. HD. DATE

| a | b | c | d | e | f | g | h | i |
|---|---|---|---|---|---|---|---|---|
| TOKYO | ✓ | NEWHOUSE | ✓ | | | | | |
| M-H | | | | | | | | |
| TORONTO | ✓ | | | | | | | |

REPRODUCTION LOCATED AT | JOB NOS. 2223 | USED ON

LIMITS—ON DIMENSIONS WHERE LIMITS ARE NOT SHOWN USE THE FOLLOWING:—
ON ALL DECIMAL DIMENSIONS ± .005
ON ALL OTHER LINEAR DIMENSIONS ±1/64
ANGULAR DIMENSIONS ± 1°

DES. ENGR. | DRAWN MP | CHECKED WLM | APPROVED

# WIRING DIAGRAM-INTERNAL SUPPLEMENTARY WIRING 2 SPEED CHART DRIVE WITHOUT CHART SWITCH CL 15 STRIP CHART RECORDER

MINNEAPOLIS-HONEYWELL REG. CO.
BROWN INSTRUMENTS DIVISION
PHILADELPHIA, PA., U. S. A. MP

SCALE NONE | DRAWING NO. 369863 | CL. 3
DATE 12-19-62

369863

J. H. WEIL MFG., PHILA.

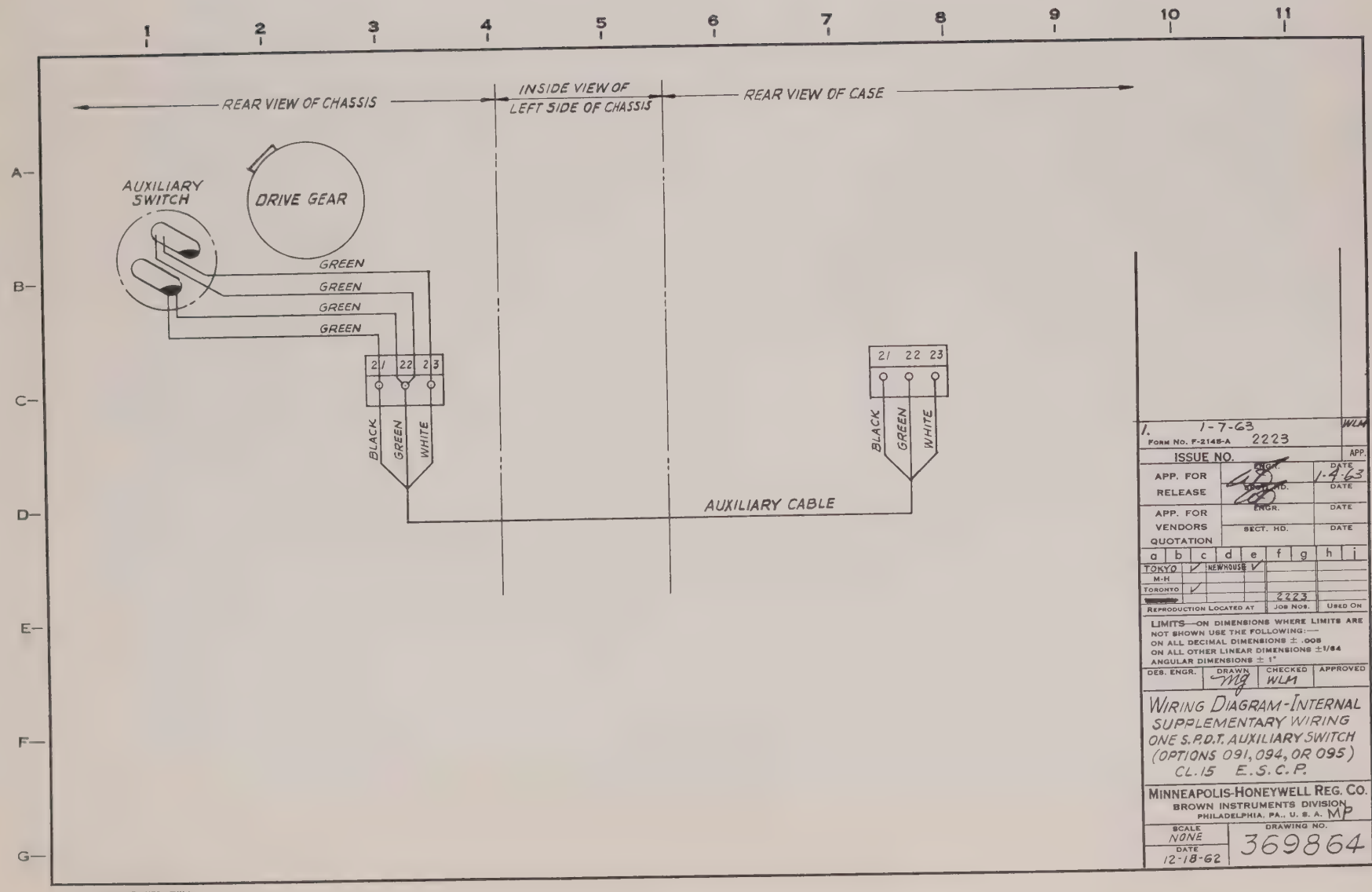

REAR VIEW OF CHASSIS
INSIDE VIEW OF LEFT SIDE OF CHASSIS
REAR VIEW OF CASE
AUXILIARY SWITCH
DRIVE GEAR
GREEN
GREEN
GREEN
GREEN
21 22 23
BLACK
GREEN
WHITE
21 22 23
BLACK
GREEN
WHITE
AUXILIARY CABLE
1 2 3 4 5 6 7 8 9 10 11
A B C D E F G
369864
1. 1-7-63 WLM
FORM NO. F-2145-A 2223
ISSUE NO. APP.
APP. FOR RELEASE ENGR. DATE 1-4-63
SECT. HD. DATE
APP. FOR VENDORS QUOTATION ENGR. DATE
SECT. HD. DATE
a b c d e f g h i
TOKYO ✓ NEWHOUSE ✓
M-H
TORONTO ✓
2223
REPRODUCTION LOCATED AT JOB NOS. USED ON
LIMITS—ON DIMENSIONS WHERE LIMITS ARE NOT SHOWN USE THE FOLLOWING:—
ON ALL DECIMAL DIMENSIONS ± .005
ON ALL OTHER LINEAR DIMENSIONS ±1/64
ANGULAR DIMENSIONS ± 1°
DES. ENGR. DRAWN mg CHECKED WLM APPROVED
WIRING DIAGRAM-INTERNAL SUPPLEMENTARY WIRING
ONE S.P.D.T. AUXILIARY SWITCH
(OPTIONS 091, 094, OR 095)
CL.15 E.S.C.P.
MINNEAPOLIS-HONEYWELL REG. CO.
BROWN INSTRUMENTS DIVISION
PHILADELPHIA, PA., U. S. A. MP
SCALE NONE
DATE 12-18-62
DRAWING NO. 369864
CL. 3
J. H. WEIL MFG., PHILA.

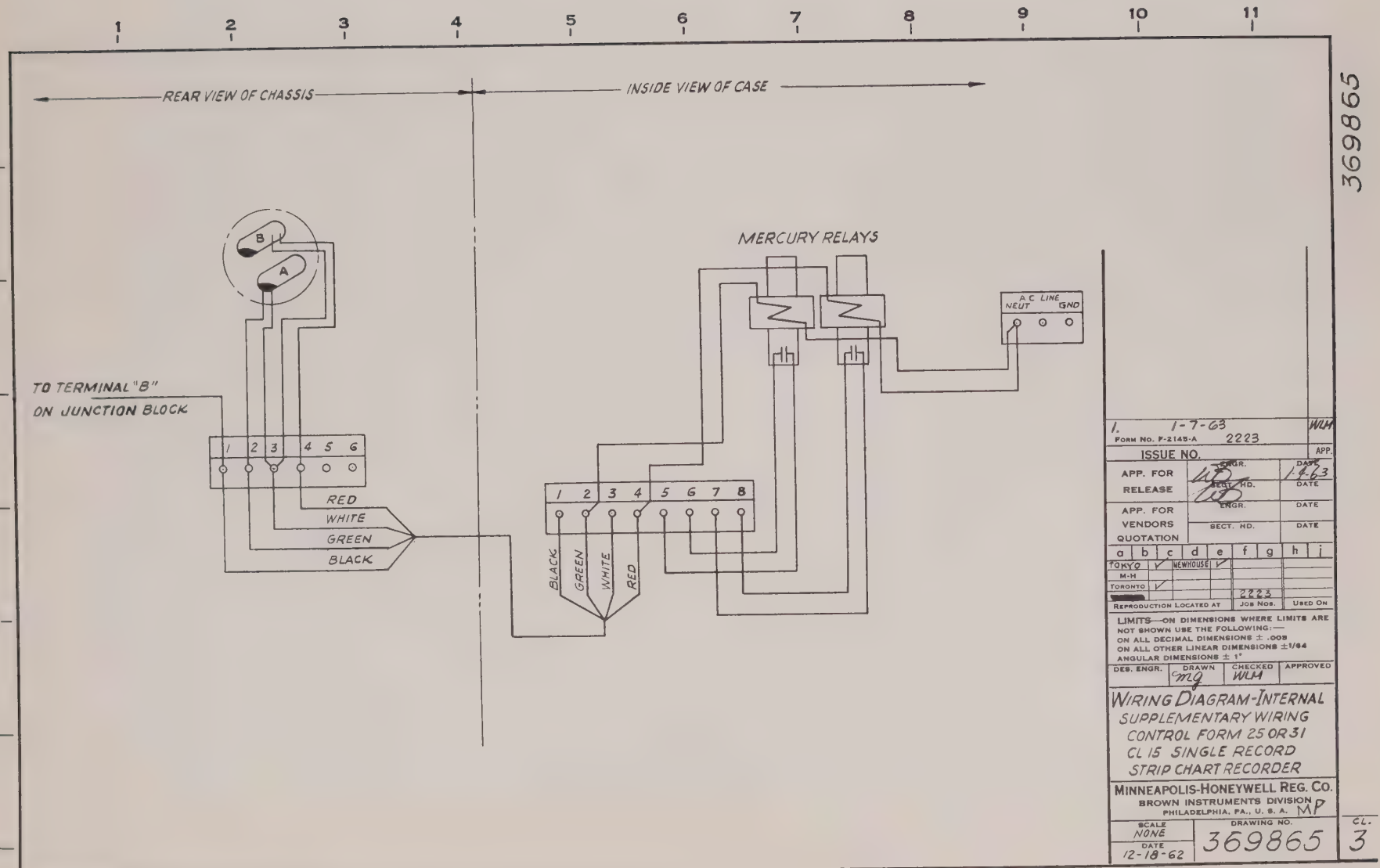


369865

| | | | | | | | | | | |
|---|---|---|---|---|---|---|---|---|---|---|
| 1 | 2 | 3 | 4 | 5 | 6 | 7 | 8 | 9 | 10 | 11 |

| | |
|---|---|
| A | |
| B | |
| C | |
| D | |
| E | |
| F | |
| G | |

1. 1-7-63 WLH
FORM NO. F-2145-A 2223
ISSUE NO. APP.

| | | | |
|---|---|---|---|
| APP. FOR RELEASE | ENGR. | | DATE 1-7-63 |
| | SECT. HD. | | DATE |
| APP. FOR VENDORS QUOTATION | ENGR. | | DATE |
| | SECT. HD. | | DATE |

| a | b | c | d | e | f | g | h | i |
|---|---|---|---|---|---|---|---|---|
| TOKYO | ✓ | NEWHOUSE | ✓ | | | | | |
| M-H | | | | | | | | |
| TORONTO | ✓ | | | | | | | |
| | | | | | 2223 | | | |
| REPRODUCTION LOCATED AT | | | | | JOB NOS. | | USED ON | |

LIMITS—ON DIMENSIONS WHERE LIMITS ARE NOT SHOWN USE THE FOLLOWING:—
ON ALL DECIMAL DIMENSIONS ± .005
ON ALL OTHER LINEAR DIMENSIONS ±1/64
ANGULAR DIMENSIONS ± 1°

| DES. ENGR. | DRAWN | CHECKED | APPROVED |
|---|---|---|---|
| | mg | WLH | |

# WIRING DIAGRAM-INTERNAL
SUPPLEMENTARY WIRING
CONTROL FORM 25 OR 31
CL 15 SINGLE RECORD
STRIP CHART RECORDER

MINNEAPOLIS-HONEYWELL REG. CO.
BROWN INSTRUMENTS DIVISION
PHILADELPHIA, PA., U. S. A. MP

| SCALE | DRAWING NO. | CL. |
|---|---|---|
| NONE | 369865 | 3 |
| DATE 12-18-62 | | |

J. H. WEIL MFG., PHILA.

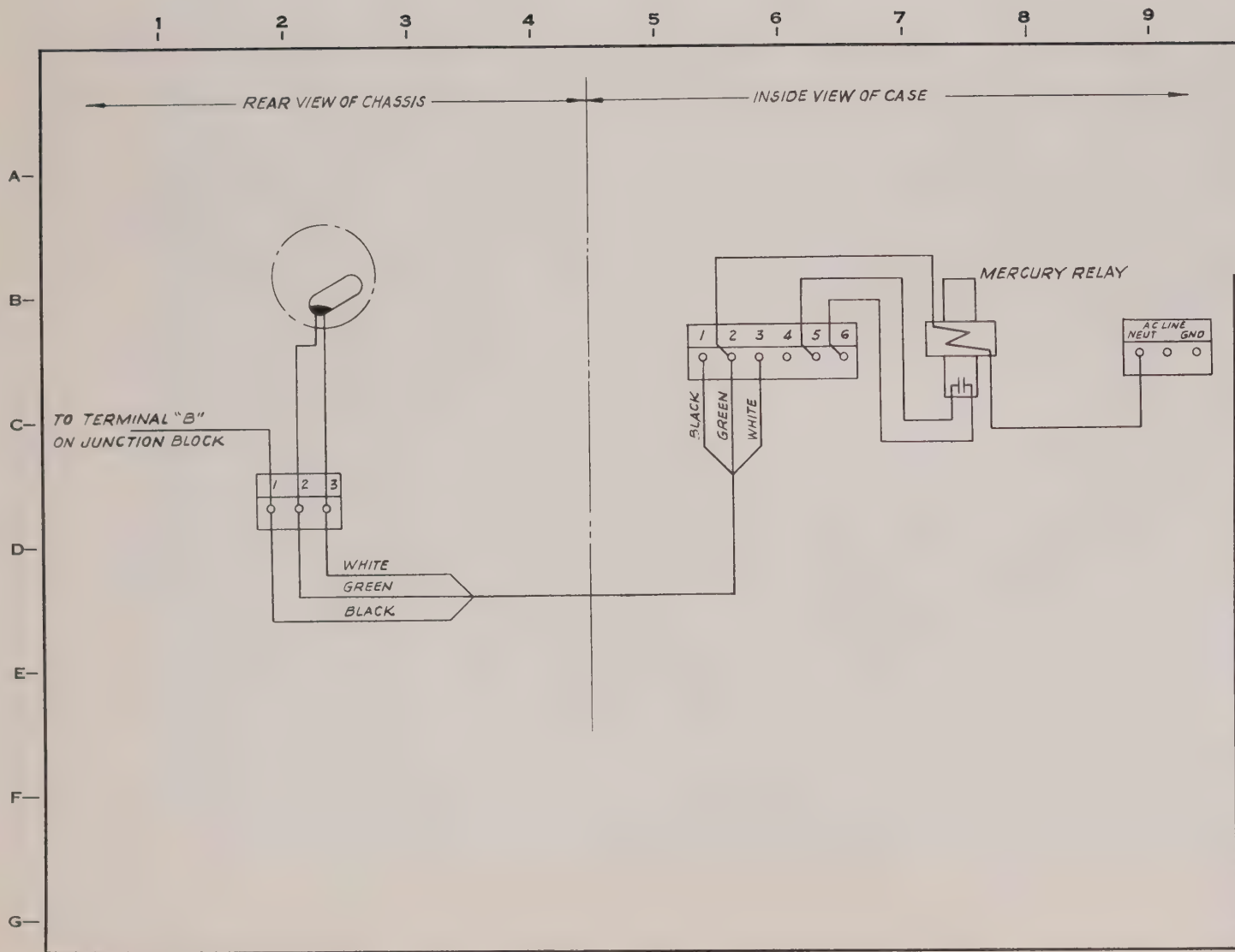


369866

1. 1-7-63 WLH
FORM NO. F-2145-A 2223

ISSUE NO. APP.

| | | |
|---|---|---|
| APP. FOR RELEASE | ENGR. | DATE 1-4-63 |
| | SECT. HD. | DATE |
| APP. FOR VENDORS QUOTATION | ENGR. | DATE |
| | SECT. HD. | DATE |

| a | b | c | d | e | f | g | h | i |
|---|---|---|---|---|---|---|---|---|
| TOKYO | | ✓ | NEWHOUSE | ✓ | | | | |
| M-H | | | | | | | | |
| TORONTO | ✓ | | | | | | | |
| [illegible] | | | | | 2223 | | | |

REPRODUCTION LOCATED AT — JOB NOS. — USED ON

LIMITS—ON DIMENSIONS WHERE LIMITS ARE NOT SHOWN USE THE FOLLOWING:—
ON ALL DECIMAL DIMENSIONS ± .005
ON ALL OTHER LINEAR DIMENSIONS ±1/64
ANGULAR DIMENSIONS ± 1°

| DES. ENGR. | DRAWN | CHECKED | APPROVED |
|---|---|---|---|
| | mg | WLH | |

WIRING DIAGRAM-INTERNAL
SUPPLEMENTARY WIRING
CONTROL FORM 21
CL. 15 SINGLE RECORD
STRIP CHART RECORDER

MINNEAPOLIS-HONEYWELL REG. CO.
BROWN INSTRUMENTS DIVISION
PHILADELPHIA, PA., U. S. A. MP

SCALE NONE
DATE 12-18-62
DRAWING NO. 369866
CL. 3

J. H. WEIL MFG., PHILA.

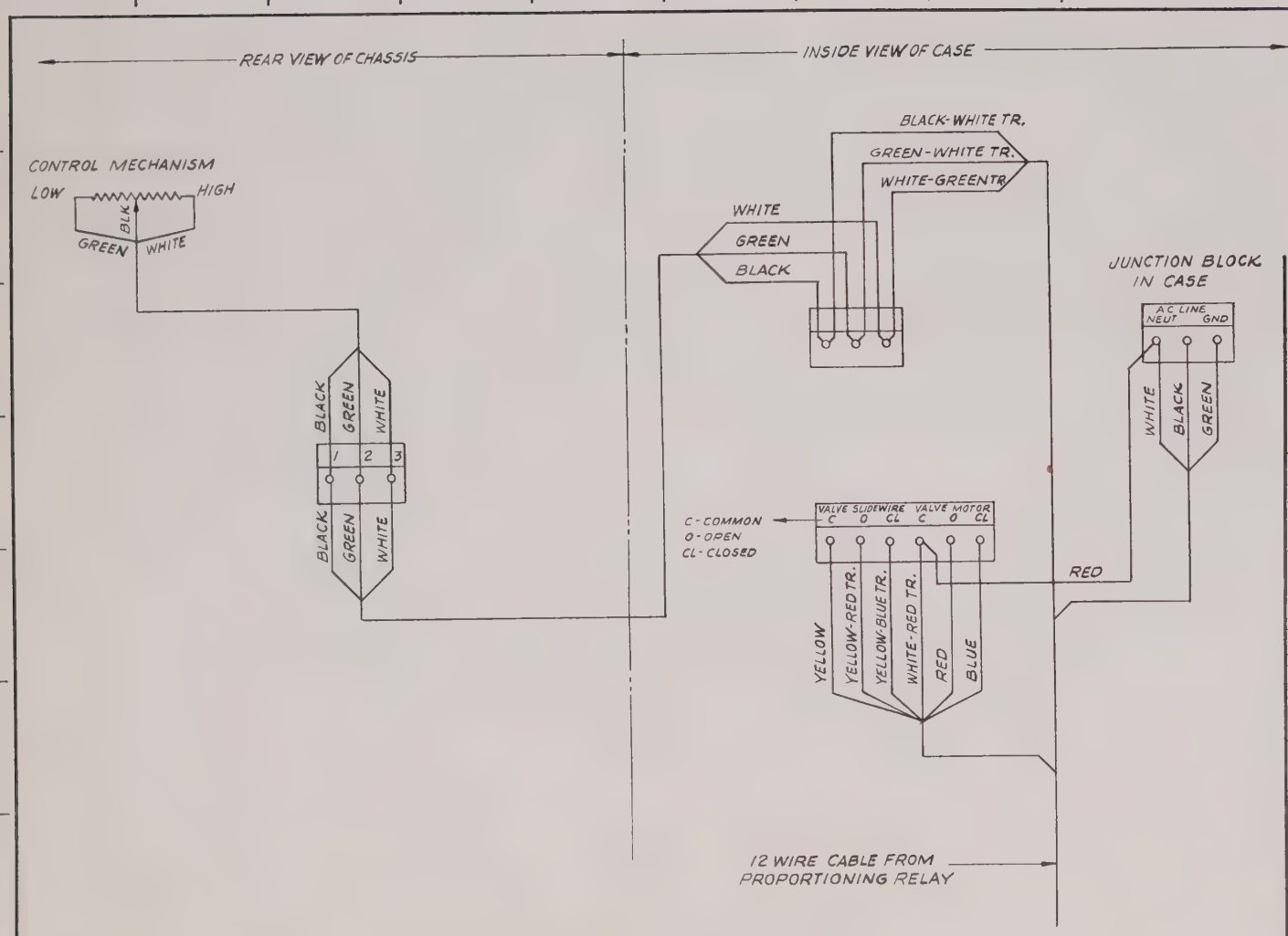


1 2 3 4 5 6 7 8 9 10 11

A B C D E F G

369867

| | | | |
|---|---|---|---|
| 1. | 1-7-63 | | WLM |
| FORM NO. F-2145-A | 2223 | | APP. |
| ISSUE NO. | | | |
| APP. FOR RELEASE | ENGR. | | DATE 1/4/63 |
| | SECT. HD. | | DATE |
| APP. FOR VENDORS QUOTATION | ENGR. | | DATE |
| | SECT. HD. | | DATE |

| a | b | c | d | e | f | g | h | i |
|---|---|---|---|---|---|---|---|---|
| TOKYO | | ✓ | NEWHOUSE | ✓ | | | | |
| M-H | | | | | | | | |
| TORONTO | | ✓ | | | | | | |

| REPRODUCTION LOCATED AT | JOB NOS. | USED ON |
|---|---|---|
| | 2223 | |

LIMITS—ON DIMENSIONS WHERE LIMITS ARE NOT SHOWN USE THE FOLLOWING:—
ON ALL DECIMAL DIMENSIONS ± .005
ON ALL OTHER LINEAR DIMENSIONS ±1/64
ANGULAR DIMENSIONS ± 1°

| DES. ENGR. | DRAWN | CHECKED | APPROVED |
|---|---|---|---|
| | JHG | WLM | |

# WIRING DIAGRAM - INTERNAL SUPPLEMENTARY WIRING CONTROL FORM 131 CL 15 SINGLE RECORD STRIP CHART RECORDER

MINNEAPOLIS-HONEYWELL REG. CO.
BROWN INSTRUMENTS DIVISION
PHILADELPHIA, PA., U. S. A. MP

| SCALE | DRAWING NO. | CL. |
|---|---|---|
| NONE | 369867 | 3 |
| DATE 12-17-62 | | |

J. H. WEIL MFG., PHILA.

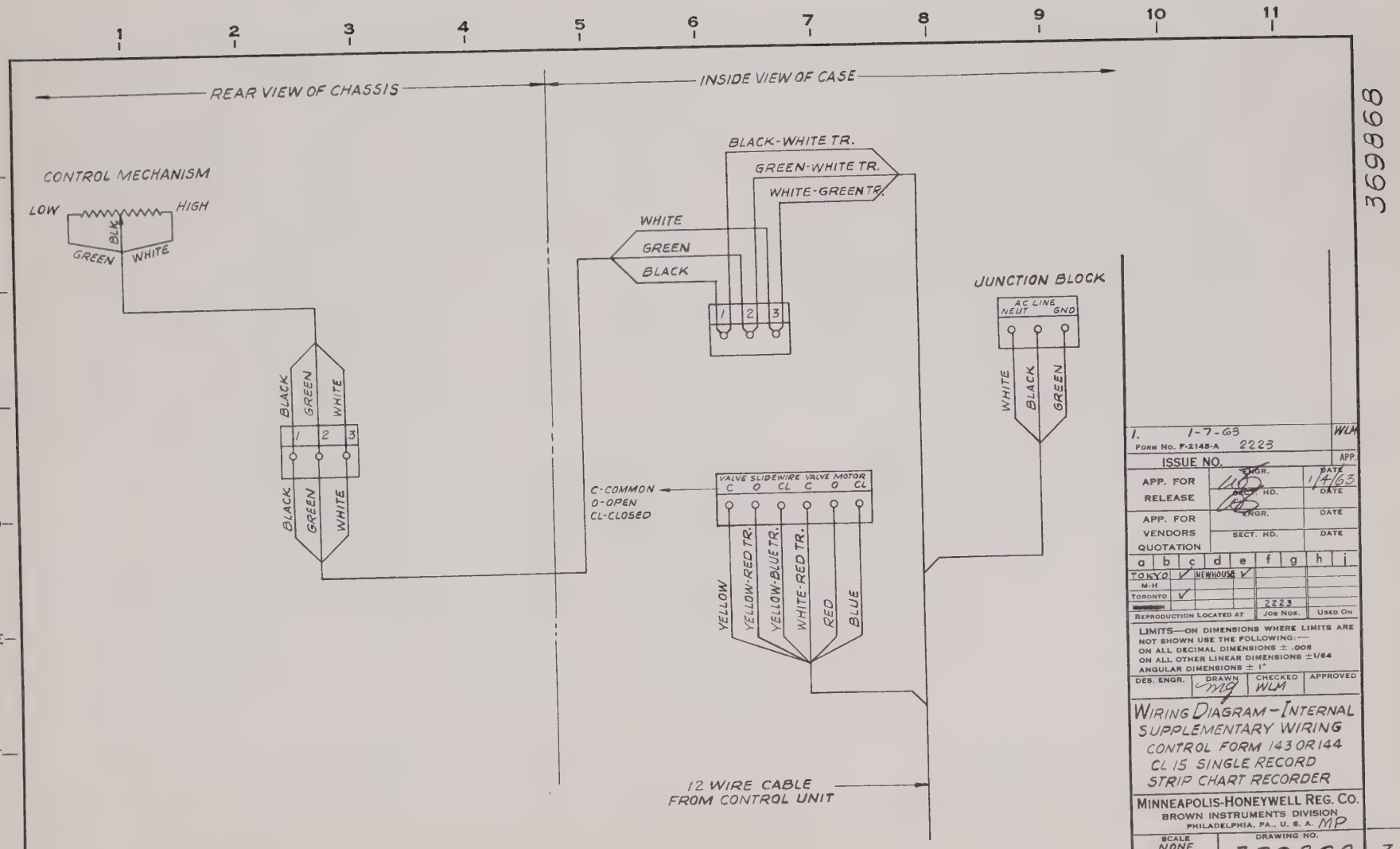


369868

| | | | |
|---|---|---|---|
| 1. 1-7-63 WLM | | | |
| FORM NO. F-2148-A 2223 | | | APP. |
| ISSUE NO. | | | |
| APP. FOR RELEASE | ENGR. | | DATE 1/14/63 |
| | PROJ. HD. | | DATE |
| | ENGR. | | DATE |
| APP. FOR VENDORS QUOTATION | SECT. HD. | | DATE |

| a | b | c | d | e | f | g | h | i |
|---|---|---|---|---|---|---|---|---|
| TOKYO ✓ | | NEWHOUSE ✓ | | | | | | |
| M-H | | | | | | | | |
| TORONTO ✓ | | | | | | | | |
| [illegible] | | | | 2223 | | | | |
| REPRODUCTION LOCATED AT | | | | JOB NOS. | | USED ON | | |

LIMITS—ON DIMENSIONS WHERE LIMITS ARE NOT SHOWN USE THE FOLLOWING:—
ON ALL DECIMAL DIMENSIONS ± .005
ON ALL OTHER LINEAR DIMENSIONS ±1/64
ANGULAR DIMENSIONS ± 1°

| DES. ENGR. | DRAWN | CHECKED | APPROVED |
|---|---|---|---|
| | CMG | WLM | |

WIRING DIAGRAM—INTERNAL SUPPLEMENTARY WIRING
CONTROL FORM 143 OR 144
CL 15 SINGLE RECORD
STRIP CHART RECORDER

MINNEAPOLIS-HONEYWELL REG. CO.
BROWN INSTRUMENTS DIVISION
PHILADELPHIA, PA., U. S. A. MP

| SCALE | DRAWING NO. | |
|---|---|---|
| NONE | 369868 | 3 |
| DATE 12-17-62 | | |

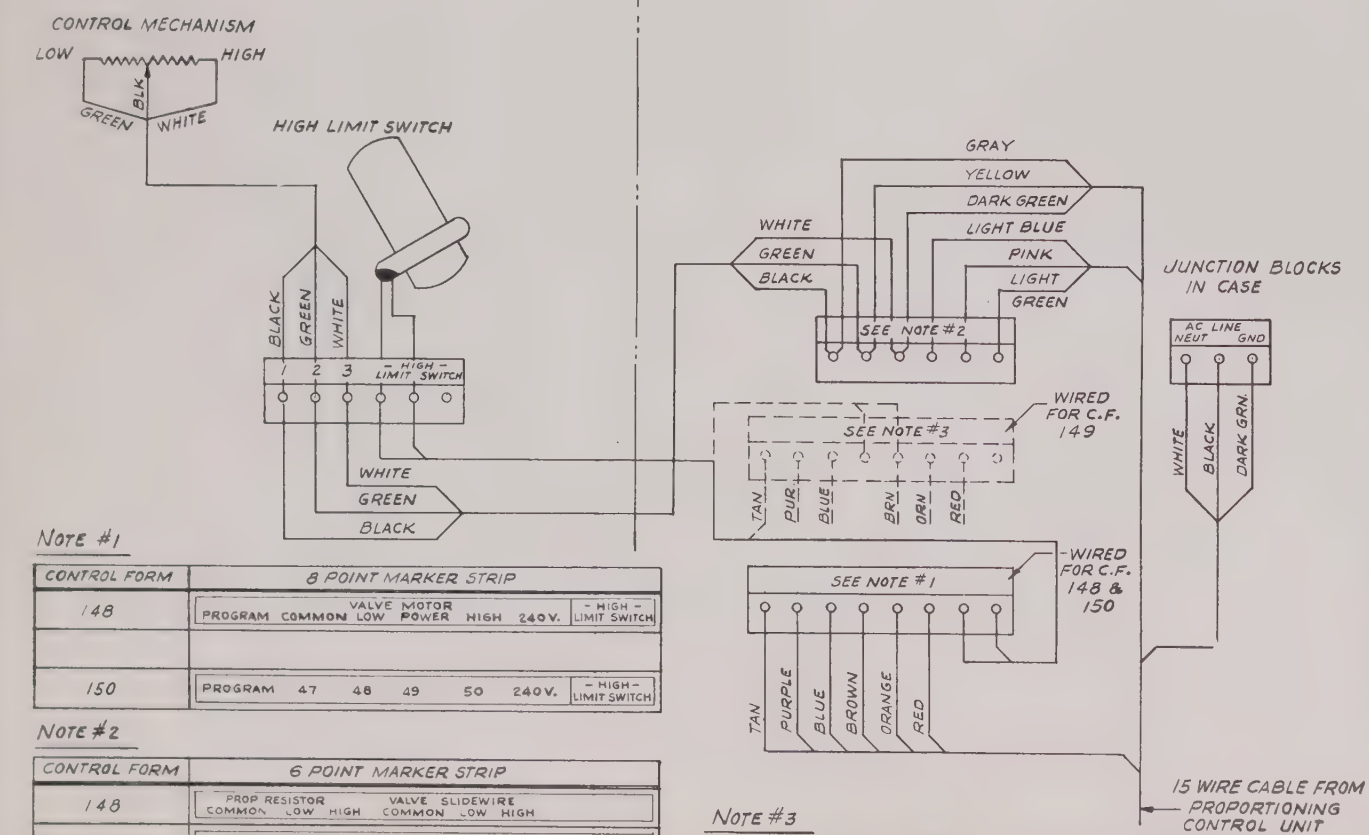


NOTE #1

| CONTROL FORM | 8 POINT MARKER STRIP |
|---|---|
| 148 | VALVE MOTOR PROGRAM COMMON LOW POWER HIGH 240V. - HIGH - LIMIT SWITCH |
| | |
| 150 | PROGRAM 47 48 49 50 240V. - HIGH - LIMIT SWITCH |

NOTE #2

| CONTROL FORM | 6 POINT MARKER STRIP |
|---|---|
| 148 | PROP RESISTOR COMMON LOW HIGH VALVE SLIDEWIRE COMMON LOW HIGH |
| 149 | PROP RESISTOR COMMON LOW HIGH 51 52 53 |
| 150 | PROP RESISTOR COMMON LOW HIGH 51 DC OUTPUT NEG POS |

NOTE #3

| CONTROL FORM | 8 POINT MARKER STRIP |
|---|---|
| 149 | PROGRAM 46 HEAT LIMIT SWITCH POWER COOL 240V. |

1. 1-7-63 WLM
FORM NO. F-2145-A 2223
ISSUE NO. APP.

| | | |
|---|---|---|
| APP. FOR RELEASE | ENGR. | DATE 1-4-63 |
| | SECT. HD. | DATE |
| APP. FOR VENDORS QUOTATION | ENGR. | DATE |
| | SECT. HD. | DATE |

| a | b | c | d | e | f | g | h | i |
|---|---|---|---|---|---|---|---|---|
| TOKYO | ✓ | NEWHOUSE | ✓ | | | | | |
| M-H | | | | | | | | |
| TORONTO | ✓ | | | | | | | |
| [redacted] | | | | | 2223 | | | |
| REPRODUCTION LOCATED AT | | | | | JOB NOS. | | USED ON | |

LIMITS—ON DIMENSIONS WHERE LIMITS ARE NOT SHOWN USE THE FOLLOWING:—
ON ALL DECIMAL DIMENSIONS ± .005
ON ALL OTHER LINEAR DIMENSIONS ±1/64
ANGULAR DIMENSIONS ± 1°

| DES. ENGR. | DRAWN | CHECKED | APPROVED |
|---|---|---|---|
| | MG | WLM | |

WIRING DIAGRAM-INTERNAL
SUPPLEMENTARY WIRING
CONTROL FORM 148, 149, OR 150
CL 15 SINGLE RECORD
STRIP CHART RECORDER

MINNEAPOLIS-HONEYWELL REG. CO.
BROWN INSTRUMENTS DIVISION
PHILADELPHIA, PA., U. S. A. MP

SCALE NONE
DATE 12-18-62
DRAWING NO. 369869
CL. 3

369869

J. H. WEIL MFG., PHILA.

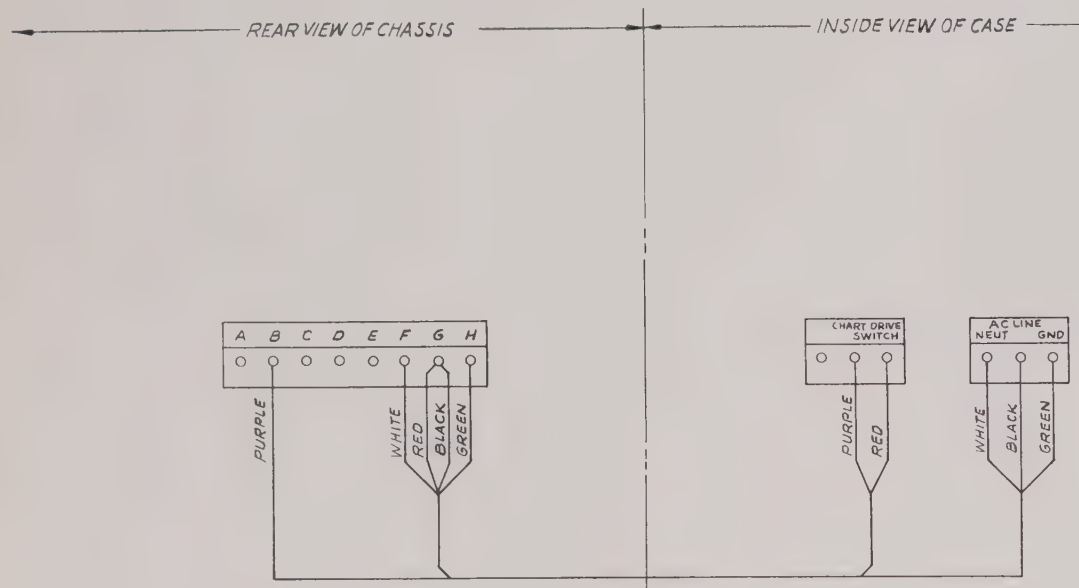


369870

| | | | | |
|---|---|---|---|---|
| 1. 1-7-63 | | | | WLM |
| FORM NO. F-2145-A 2223 | | | | APP. |
| ISSUE NO. | | | | |
| APP. FOR RELEASE | ENGR. | | DATE | 1-4-63 |
| | SECT. HD. | | DATE | |
| APP. FOR VENDORS QUOTATION | ENGR. | | DATE | |
| | SECT. HD. | | DATE | |

| a | b | c | d | e | f | g | h | i |
|---|---|---|---|---|---|---|---|---|
| TOKYO | ✓ | NEWHOUSE | ✓ | | | | | |
| M-H | | | | | | | | |
| TORONTO | ✓ | | | | | | | |
| [redacted] | | | | | 2223 | | | |
| REPRODUCTION LOCATED AT | | | | | JOB NOS. | | USED ON | |

LIMITS—ON DIMENSIONS WHERE LIMITS ARE NOT SHOWN USE THE FOLLOWING:—
ON ALL DECIMAL DIMENSIONS ± .005
ON ALL OTHER LINEAR DIMENSIONS ±1/64
ANGULAR DIMENSIONS ± 1°

| DES. ENGR. | DRAWN | CHECKED | APPROVED |
|---|---|---|---|
| | MG | WLM | |

# WIRING DIAGRAM-INTERNAL SUPPLEMENTARY WIRING CL 15 E. S. C. P. WITHOUT CHART AND POWER SWITCHES (OPTIONS: 017; 019; 023; 025)

MINNEAPOLIS-HONEYWELL REG. CO.
BROWN INSTRUMENTS DIVISION
PHILADELPHIA, PA., U. S. A. MP

| SCALE | DRAWING NO. | CL. |
|---|---|---|
| NONE | 369870 | 3 |
| DATE 12-18-62 | | |

J. H. WEIL MFG., PHILA.

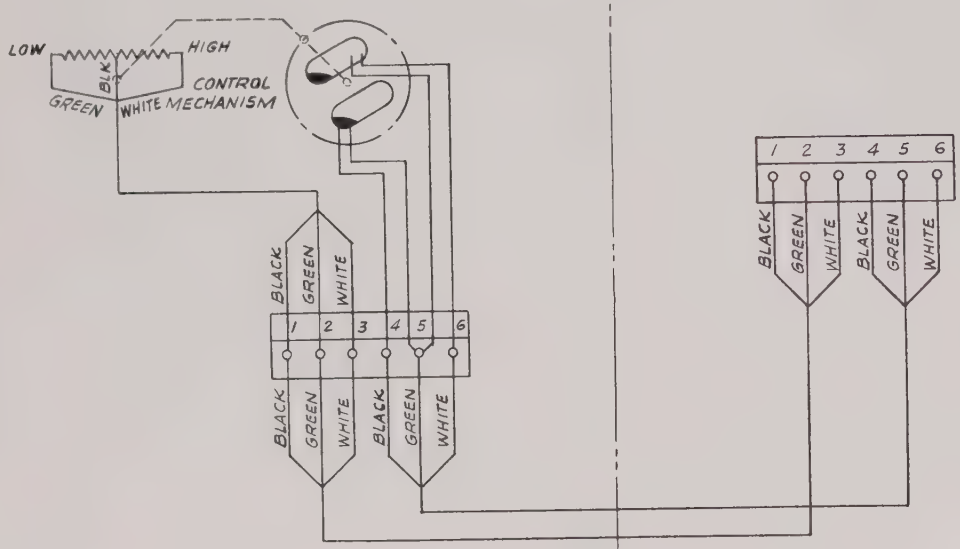


369871

| | | | | | | | | | |
|---|---|---|---|---|---|---|---|---|---|
| 1. 1-7-63 WLH | | | | | | | | | |
| FORM NO. F-2145-A 2223 | | | | | | | | | APP. |
| ISSUE NO. | | | | | | | | | DATE |
| APP. FOR RELEASE | ENGR. | | | | | | | | DATE 1-9-63 |
| APP. FOR VENDORS QUOTATION | SECT. HD. | | | | | | | | DATE |
| a | b | c | d | e | f | g | h | i | |
| TOKYO ✓ | | NEWHOUSE ✓ | | | | | | | |
| M-H | | | | | | | | | |
| TORONTO ✓ | | | | | | | | | |
| | | | | | 2223 | | | | |
| REPRODUCTION LOCATED AT | | | | | JOB NOS. | | | | USED ON |

LIMITS—ON DIMENSIONS WHERE LIMITS ARE NOT SHOWN USE THE FOLLOWING:—
ON ALL DECIMAL DIMENSIONS ± .005
ON ALL OTHER LINEAR DIMENSIONS ±1/64
ANGULAR DIMENSIONS ± 1°

| DES. ENGR. | DRAWN MM | CHECKED WLH | APPROVED |
|---|---|---|---|

# WIRING DIAGRAM-INTERNAL SUPPLEMENTARY WIRING CONTROL FORM 14 CL 15 SINGLE RECORD STRIP CHART RECORDER

MINNEAPOLIS-HONEYWELL REG. CO.
BROWN INSTRUMENTS DIVISION
PHILADELPHIA, PA., U. S. A. MP

| SCALE | DRAWING NO. | CL. |
|---|---|---|
| NONE | 369871 | 3 |
| DATE 12-18-62 | | |

J. H. WEIL MFG., PHILA.

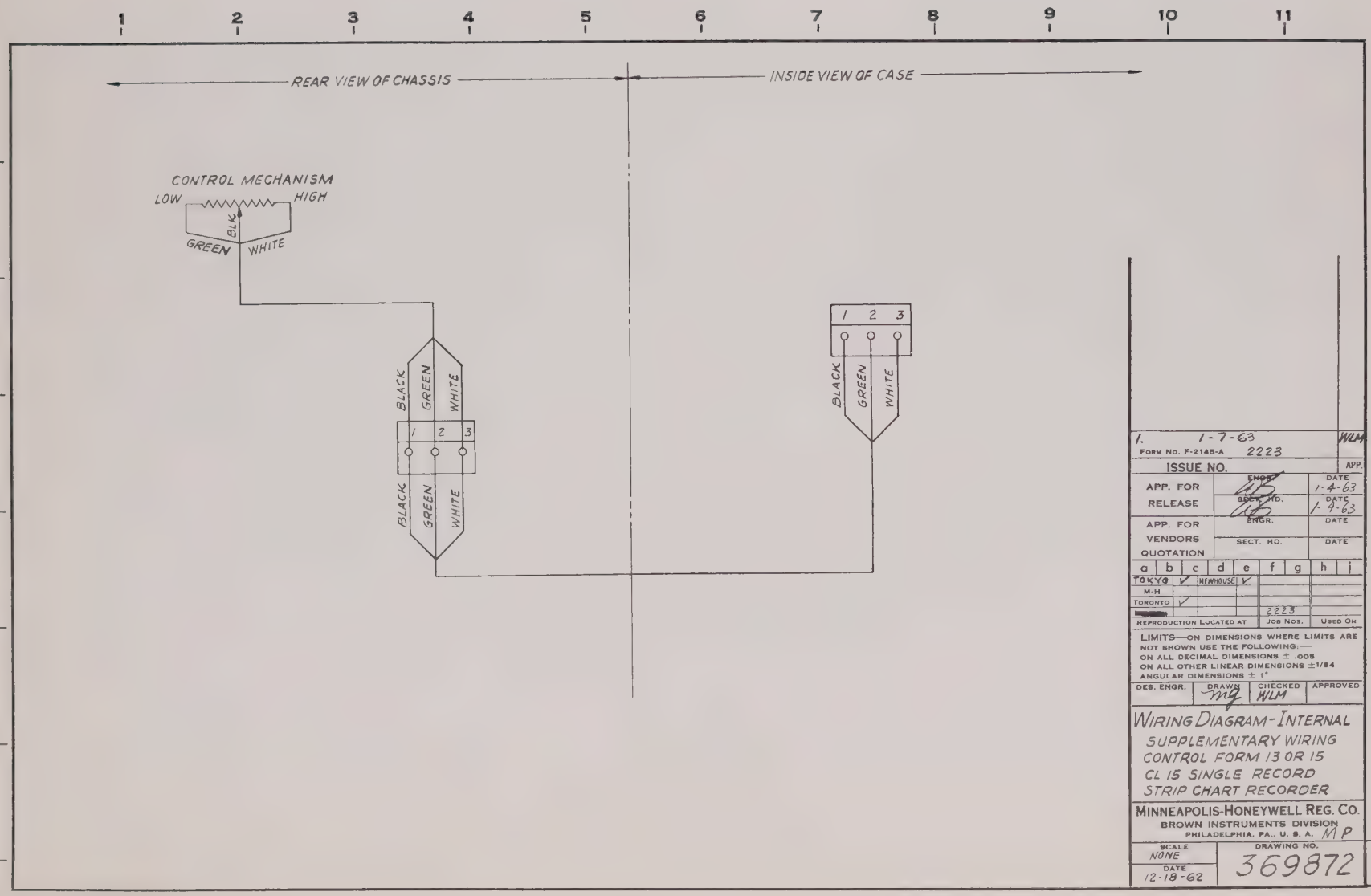


369872

| | | | |
|---|---|---|---|
| 1. 1-7-63 | | | WLM |
| FORM NO. F-2145-A 2223 | | | |
| ISSUE NO. | | | APP. |
| APP. FOR RELEASE | ENGR. | | DATE 1-4-63 |
| | SECT. HD. | | DATE 1-4-63 |
| APP. FOR VENDORS QUOTATION | ENGR. | | DATE |
| | SECT. HD. | | DATE |

| a | b | c | d | e | f | g | h | i |
|---|---|---|---|---|---|---|---|---|
| TOKYO | V | NEWHOUSE | V | | | | | |
| M-H | | | | | | | | |
| TORONTO | V | | | | | | | |
| [redacted] | | | | | 2223 | | | |

REPRODUCTION LOCATED AT | JOB NOS. | USED ON

LIMITS—ON DIMENSIONS WHERE LIMITS ARE NOT SHOWN USE THE FOLLOWING:—
ON ALL DECIMAL DIMENSIONS ± .005
ON ALL OTHER LINEAR DIMENSIONS ±1/64
ANGULAR DIMENSIONS ± 1°

| DES. ENGR. | DRAWN | CHECKED | APPROVED |
|---|---|---|---|
| | mg | WLM | |

# WIRING DIAGRAM-INTERNAL

SUPPLEMENTARY WIRING
CONTROL FORM 13 OR 15
CL 15 SINGLE RECORD
STRIP CHART RECORDER

MINNEAPOLIS-HONEYWELL REG. CO.
BROWN INSTRUMENTS DIVISION
PHILADELPHIA, PA., U. S. A. MP

| SCALE | DRAWING NO. | CL. |
|---|---|---|
| NONE | 369872 | 3 |
| DATE 12-18-62 | | |

J. H. WEIL MFG., PHILA.

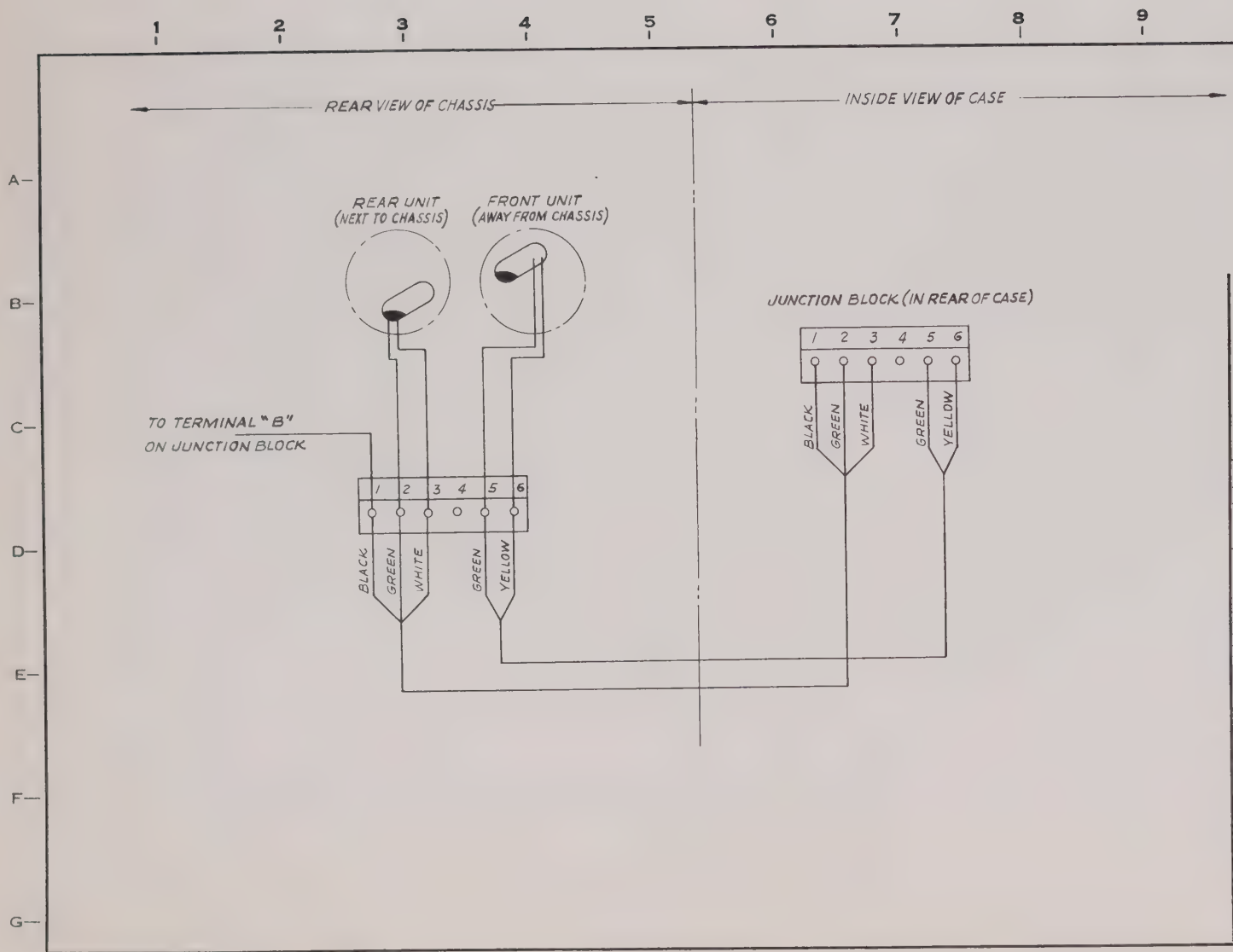


369877

| | | | |
|---|---|---|---|
| 1. 1-7-63 FORM NO. F-2145-A 2223 | | | WLM |
| ISSUE NO. | | | APP. |
| APP. FOR RELEASE | ENGR. | DATE 1-4-63 | |
| | SECT. HD. | DATE | |
| APP. FOR VENDORS QUOTATION | ENGR. | DATE | |
| | SECT. HD. | DATE | |

| a | b | c | d | e | f | g | h | i |
|---|---|---|---|---|---|---|---|---|
| TOKYO | | ✓ | NEWHOUSE | ✓ | | | | |
| M-H | | | | | | | | |
| TORONTO | | ✓ | | | | | | |
| [redacted] | | | | | 2223 | | | |
| REPRODUCTION LOCATED AT | | | | | JOB NOS. | | USED ON | |

LIMITS—ON DIMENSIONS WHERE LIMITS ARE NOT SHOWN USE THE FOLLOWING:—
ON ALL DECIMAL DIMENSIONS ± .005
ON ALL OTHER LINEAR DIMENSIONS ±1/64
ANGULAR DIMENSIONS ± 1°

| DES. ENGR. | DRAWN | CHECKED | APPROVED |
|---|---|---|---|
| | MG | WLM | |

WIRING DIAGRAM-INTERNAL
SUPPLEMENTARY WIRING
CONTROL FORM 37
CL 15 SINGLE RECORD
STRIP CHART RECORDER

MINNEAPOLIS-HONEYWELL REG. CO.
BROWN INSTRUMENTS DIVISION
PHILADELPHIA, PA., U. S. A. MP

| SCALE | DRAWING NO. | CL. |
|---|---|---|
| NONE | 369877 | 3 |
| DATE 12-18-62 | | |

J. H. WEIL MFG., PHILA.

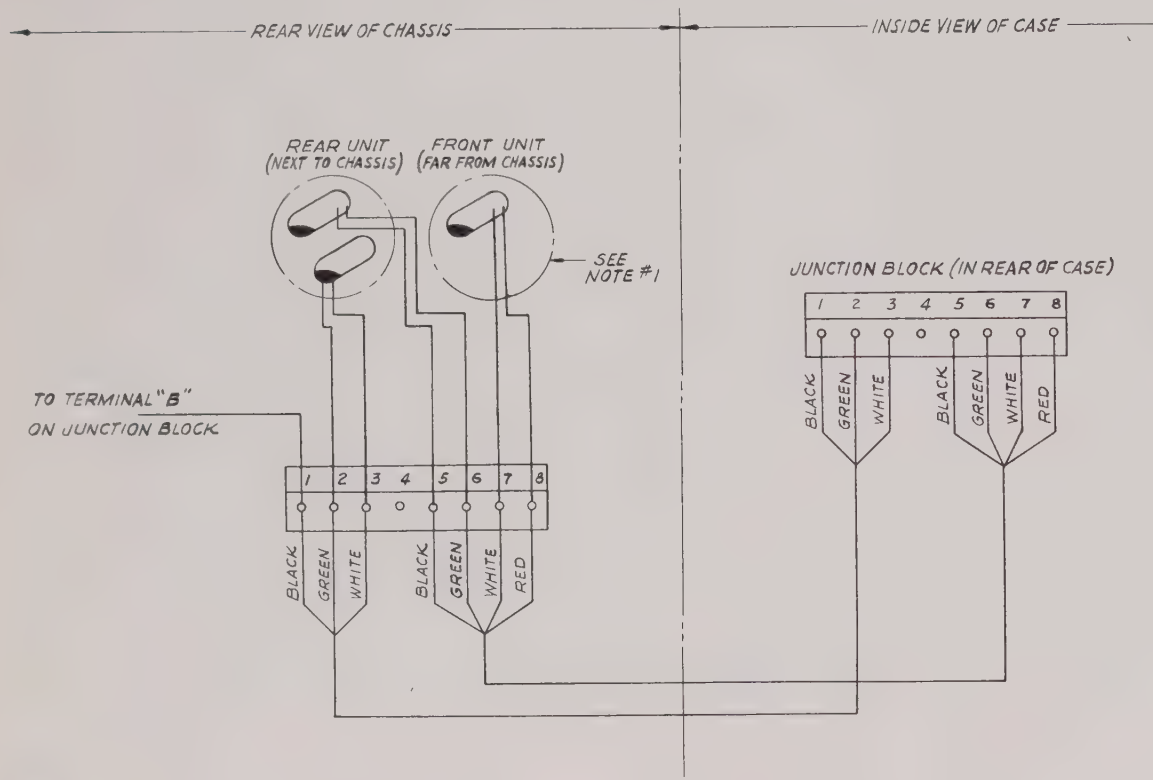


NOTE:-
SWITCH POSITION SHOWN FOR CONTROL FORM 40.
IF CONTROL FORM 42 IS SPECIFIED, REVERSE SWITCH IN CLIP "D."

| | | | |
|---|---|---|---|
| 1. 1-7-63 WLH | | | |
| FORM NO. F-2148-A | | | |
| ISSUE NO. | | | APP. |
| APP. FOR RELEASE | ENGR. | | DATE 1-4-63 |
| | SECT. HD. | | DATE |
| APP. FOR VENDORS QUOTATION | ENGR. | | DATE |
| | SECT. HD. | | DATE |
| a b c d e f g h i | | | |
| TOKYO ✓ NEWHOUSE ✓ | | | |
| M-H | | | |
| TORONTO ✓ | | | |
| [redacted] | | 2223 | |
| REPRODUCTION LOCATED AT | | JOB NOS. | USED ON |

LIMITS—ON DIMENSIONS WHERE LIMITS ARE NOT SHOWN USE THE FOLLOWING:—
ON ALL DECIMAL DIMENSIONS ± .005
ON ALL OTHER LINEAR DIMENSIONS ±1/64
ANGULAR DIMENSIONS ± 1°

| DES. ENGR. | DRAWN | CHECKED | APPROVED |
|---|---|---|---|
| | TMG | WLH | |

# WIRING DIAGRAM-INTERNAL SUPPLEMENTARY WIRING CONTROL FORM 40 OR 42 CL 15 SINGLE RECORD STRIP CHART RECORDER

MINNEAPOLIS-HONEYWELL REG. CO.
BROWN INSTRUMENTS DIVISION
PHILADELPHIA, PA., U. S. A. MP

| SCALE | DRAWING NO. | CL. |
|---|---|---|
| NONE | 369878 | 3 |
| DATE 12-18-62 | | |

369878

J. H. WEIL MFG., PHILA.

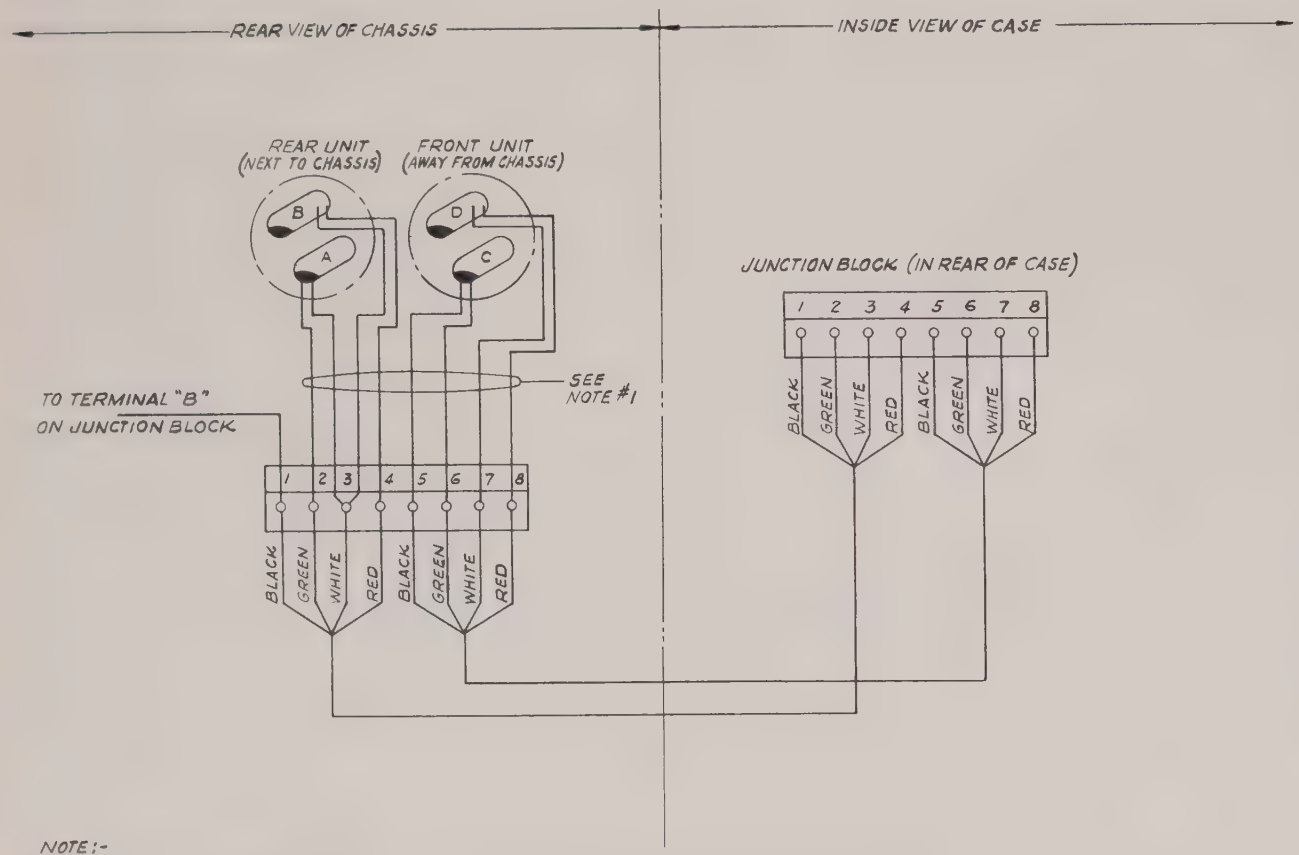


NOTE:-

SWITCH CONNECTIONS SHOWN ARE FOR CONTROL FORM 32 OR 33. FOR CONTROL FORM 43, CONNECT SWITCHES C & D TO TERMINALS 2, 3, & 4 AND SWITCHES A & B TO TERMINALS 5, 6, 7, & 8.

| | | | |
|---|---|---|---|
| 1. 1-7-63 WLH | | | |
| FORM NO. F-2148-A 2223 | | | |
| ISSUE NO. | | | APP. |
| APP. FOR RELEASE | DES. ENGR. | | DATE |
| | SECT. HD. | 1-4-63 | DATE |
| APP. FOR VENDORS QUOTATION | ENGR. | | DATE |
| | SECT. HD. | | DATE |

| a | b | c | d | e | f | g | h | j |
|---|---|---|---|---|---|---|---|---|
| TOKYO | ✓ | NEWHOUSE | ✓ | | | | | |
| M-H | | | | | | | | |
| TORONTO | ✓ | | | | | | | |
| | | | | 2223 | | | | |
| REPRODUCTION LOCATED AT | | | | JOB NOS. | | | USED ON | |

LIMITS—ON DIMENSIONS WHERE LIMITS ARE NOT SHOWN USE THE FOLLOWING:—
ON ALL DECIMAL DIMENSIONS ± .005
ON ALL OTHER LINEAR DIMENSIONS ±1/64
ANGULAR DIMENSIONS ± 1°

| DES. ENGR. | DRAWN MP | CHECKED WLH | APPROVED |
|---|---|---|---|

# WIRING DIAGRAM-INTERNAL SUPPLEMENTARY WIRING CONTROL FORM 32, 33, & 43 CL 15 SINGLE RECORD STRIP CHART RECORDER

MINNEAPOLIS-HONEYWELL REG. CO.
BROWN INSTRUMENTS DIVISION
PHILADELPHIA, PA., U. S. A. MP

| SCALE | DRAWING NO. | CL. |
|---|---|---|
| NONE | 369879 | 3 |
| DATE 12-18-62 | | |

369879

J. H. WELL MFG., PHILA.

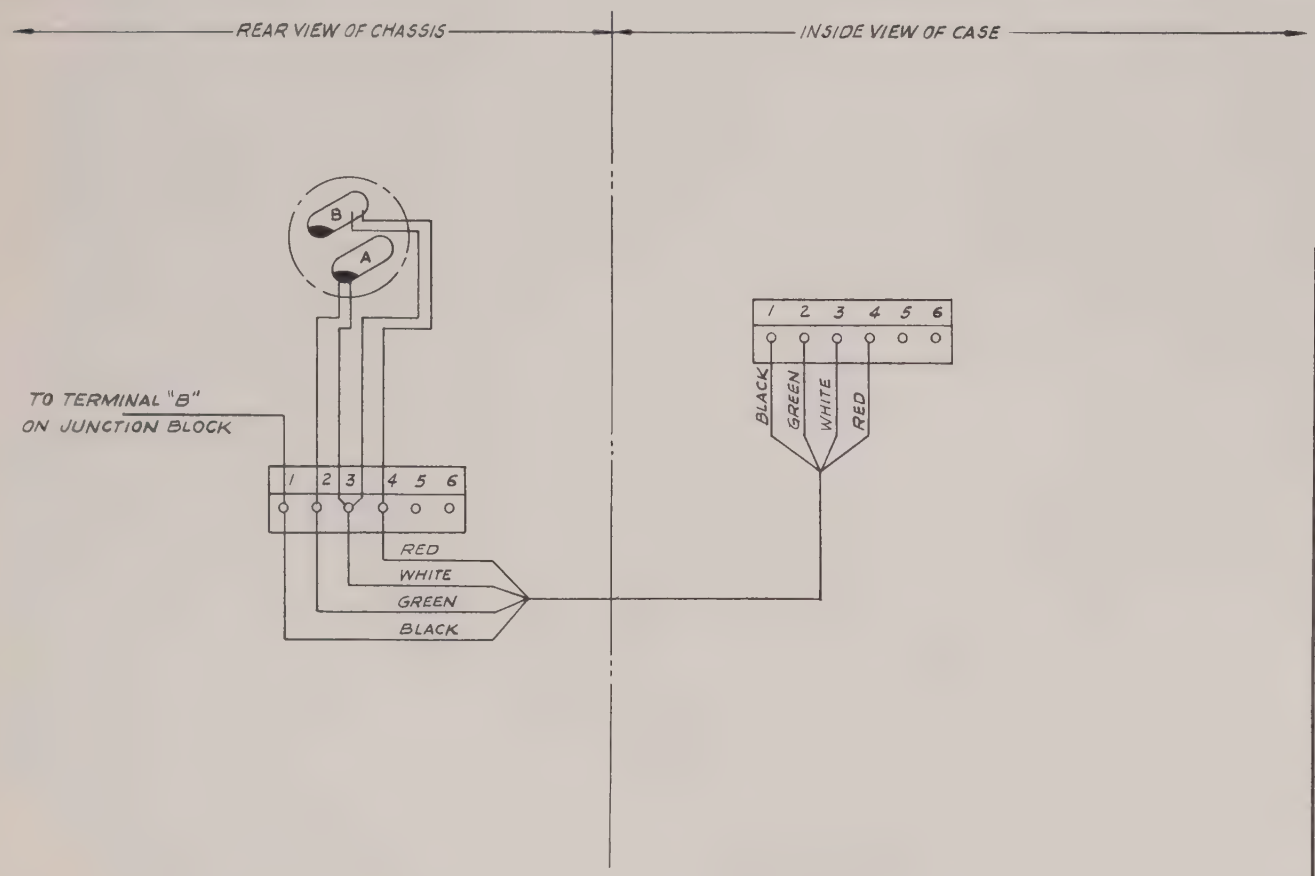


369880

| | | |
|---|---|---|
| 1. 1-7-63 | | WLM |
| FORM NO. F-2145-A 2223 | | |
| ISSUE NO. | | APP. |
| APP. FOR RELEASE | ENGR. | DATE 1-4-63 |
| | SECT. HD. | DATE |
| APP. FOR VENDORS QUOTATION | ENGR. | DATE |
| | SECT. HD. | DATE |

| a | b | c | d | e | f | g | h | i |
|---|---|---|---|---|---|---|---|---|
| TOKYO | ✓ | NEWHOUSE | ✓ | | | | | |
| M-H | | | | | | | | |
| TORONTO | ✓ | | | | | | | |
| [redacted] | | | | | 2223 | | | |
| REPRODUCTION LOCATED AT | | | | | JOB NOS. | | USED ON | |

LIMITS—ON DIMENSIONS WHERE LIMITS ARE NOT SHOWN USE THE FOLLOWING:—
ON ALL DECIMAL DIMENSIONS ± .005
ON ALL OTHER LINEAR DIMENSIONS ±1/64
ANGULAR DIMENSIONS ± 1°

| DES. ENGR. | DRAWN | CHECKED | APPROVED |
|---|---|---|---|
| | MG | WLM | |

WIRING DIAGRAM-INTERNAL
SUPPLEMENTARY WIRING
CONTROL FORM 24, 28, OR 36
CL 15 SINGLE RECORD
STRIP CHART RECORDER

MINNEAPOLIS-HONEYWELL REG. CO.
BROWN INSTRUMENTS DIVISION
PHILADELPHIA, PA., U. S. A. MP

| SCALE | DRAWING NO. | CL. |
|---|---|---|
| NONE | 369880 | 3 |
| DATE 12-18-62 | | |

J. H. WEIL MFG., PHILA.

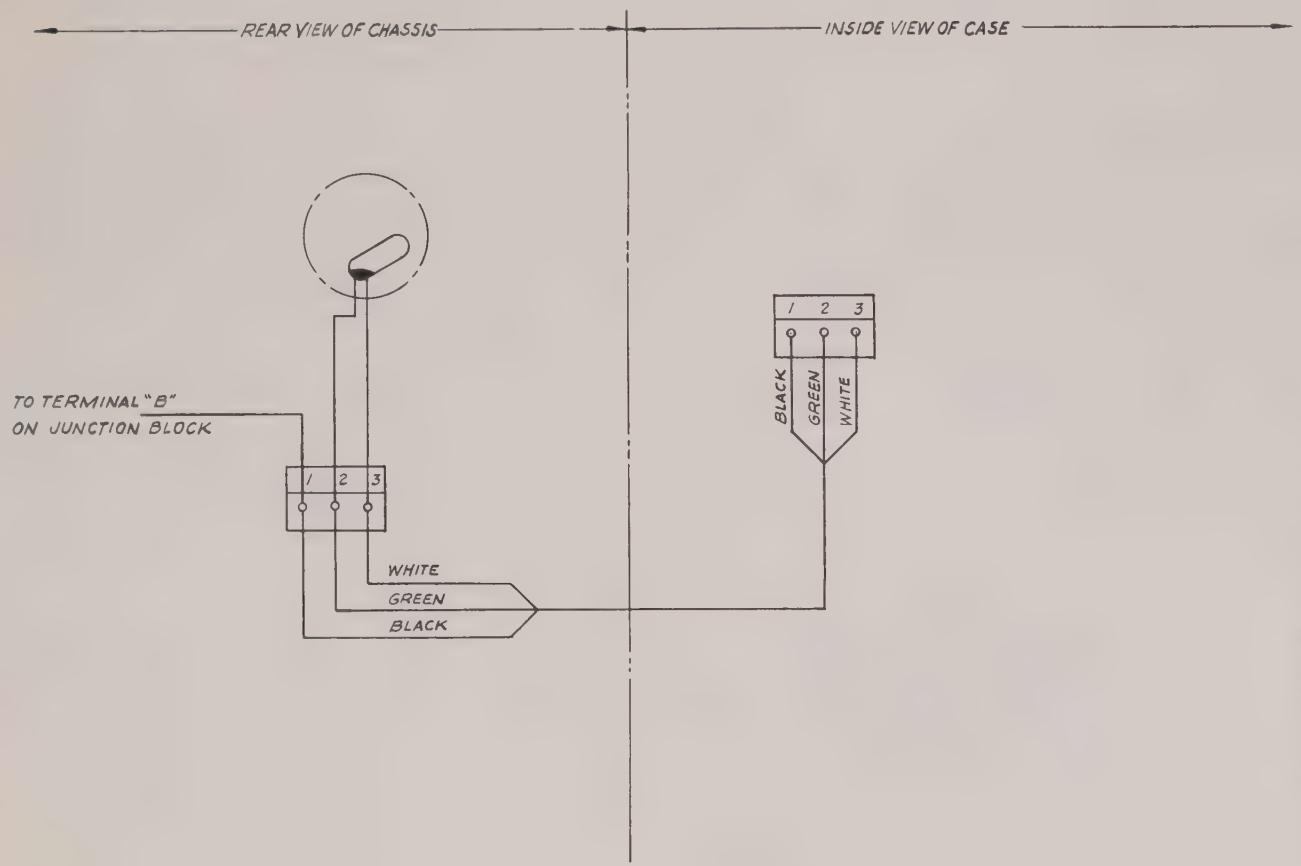


369881

| | | | |
|---|---|---|---|
| 1. 1-7-63 Form No. F-2145-A 2223 | | | WLM |
| ISSUE NO. | | | APP. |
| APP. FOR RELEASE | ENGR. WD | DATE 1-4-63 | |
| | SECT. HD. WD | DATE | |
| APP. FOR VENDORS QUOTATION | ENGR. | DATE | |
| | SECT. HD. | DATE | |

| a | b | c | d | e | f | g | h | i |
|---|---|---|---|---|---|---|---|---|
| TOKYO | ✓ | NEWHOUSE | ✓ | | | | | |
| M-H | | | | | | | | |
| TORONTO | ✓ | | | | | | | |
| [redacted] | | | | | 2223 | | | |
| REPRODUCTION LOCATED AT | | | | | JOB NOS. | | USED ON | |

LIMITS—ON DIMENSIONS WHERE LIMITS ARE NOT SHOWN USE THE FOLLOWING:—
ON ALL DECIMAL DIMENSIONS ± .005
ON ALL OTHER LINEAR DIMENSIONS ±1/64
ANGULAR DIMENSIONS ± 1°

| DES. ENGR. | DRAWN | CHECKED | APPROVED |
|---|---|---|---|
| | MG | WLM | |

WIRING DIAGRAM-INTERNAL
SUPPLEMENTARY WIRING
CONTROL FORM 20 OR 27
CL 15 SINGLE RECORD
STRIP CHART RECORDER

MINNEAPOLIS-HONEYWELL REG. CO.
BROWN INSTRUMENTS DIVISION
PHILADELPHIA, PA., U. S. A. MP

| SCALE | DRAWING NO. | CL. |
|---|---|---|
| NONE | 369881 | 3 |
| DATE 12-18-62 | | |

J. H. WEIL MFG., PHILA.

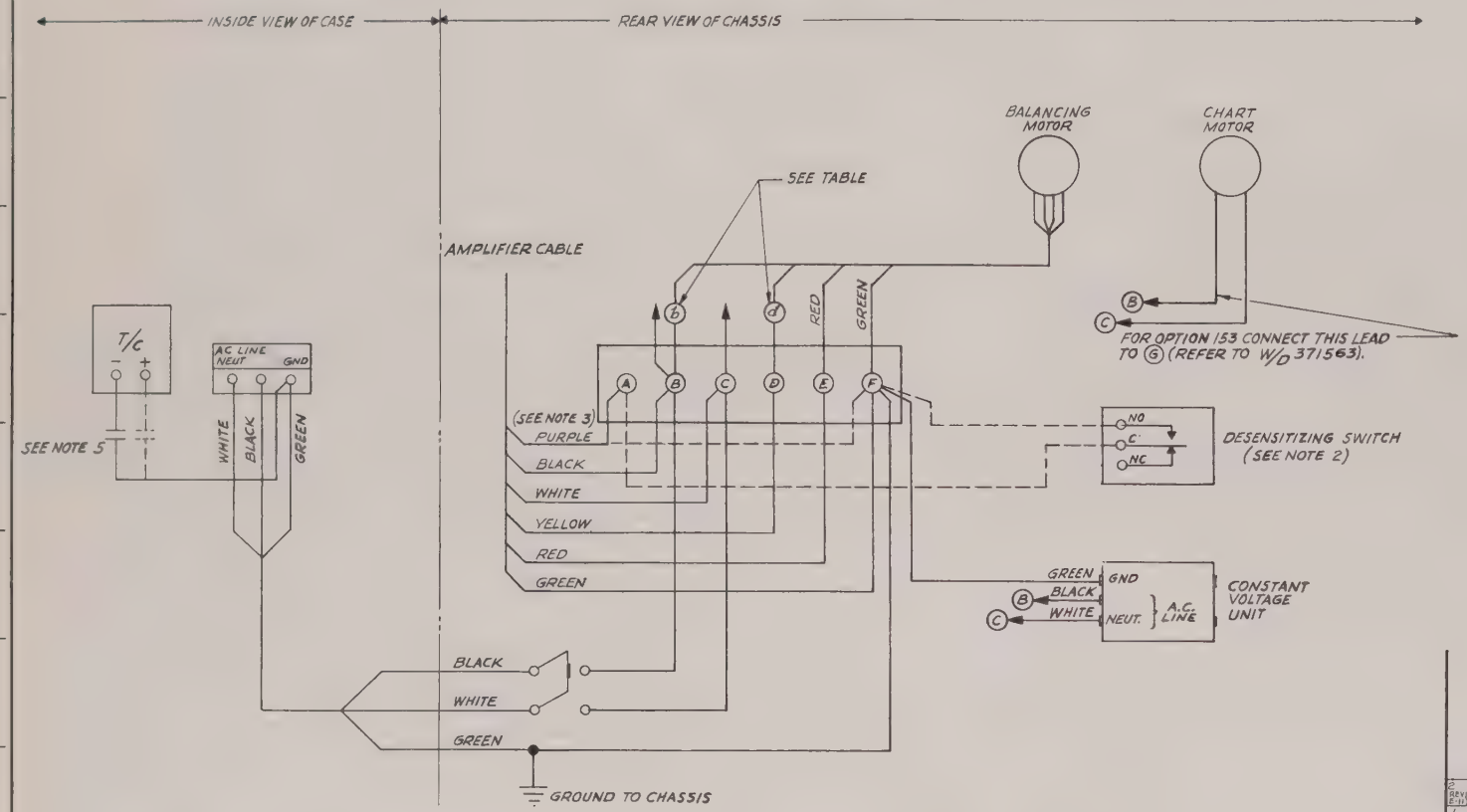


NOTES:-

1.- REFER TO 653671-1 FOR TERMINAL BLOCK LOCATIONS.

2.- DESENSITIZING USED ONLY ON 15201822, 15201836, AND 15201835 WITHOUT TABLE VII 060.

3.- WHEN AN AMPLIFIER WITHOUT A BURNOUT SWITCH IS USED AND/OR DESENSITIZING SWITCH IS OMITTED CONNECT PURPLE AMPLIFIER LEAD TO GROUND TERMINAL (F).

4.- POWER SWITCH LOCATED ON FRONT OF CHASSIS.

5.- ONE FILTER CAPACITOR USED ON ALL T/C RANGES ABOVE 850°C. (OR 1575°F.). IT IS CONNECTED AS SHOWN BY THE SOLID LINES. ON ALL TYPE "R" AND "S" RANGES, TWO FILTER CAPACITORS ARE USED AS SHOWN.

| BALANCE SPEED | RANGE | (b) LEAD COLOR | (d) LEAD COLOR |
|---|---|---|---|
| 1 & 2 | NORMAL | YELLOW | WHITE |
| 1 & 2 | REVERSED | WHITE | YELLOW |
| 3 | NORMAL | WHITE | YELLOW |
| 3 | REVERSED | YELLOW | WHITE |

2 B-5-63 EO 2530 DFP
REVISED NOTE #3
E-11 DOTTED WIRES FROM DESENSITIZING SW
1. 1.-26-63 MG
FORM No. F-2145-A 7632-1P
ISSUE NO. APP.

| APP. FOR RELEASE | ENGR. Kraynak | DATE 2-14-63 |
|---|---|---|
| | SECT. HD. | DATE |
| APP. FOR VENDORS QUOTATION | ENGR | DATE |
| | SECT. HD. | DATE |

| a | b | c | d | e | f | g | h | i |
|---|---|---|---|---|---|---|---|---|
| TOKYO | ✓ | NEWHOUSE | ✓ | | | | | |
| M-H | | | | | | | | |
| TORONTO | ✓ | | | | | | | |
| [illegible] | | | | | 7632 | | | |
| REPRODUCTION LOCATED AT | | | | | JOB NOS. | | USED ON | |

LIMITS—ON DIMENSIONS WHERE LIMITS ARE NOT SHOWN USE THE FOLLOWING —
ON ALL DECIMAL DIMENSIONS ± .005
ON ALL OTHER LINEAR DIMENSIONS ± 1/64
ANGULAR DIMENSIONS ± 1°

| DES. ENGR. | DRAWN | CHECKED | APPROVED |
|---|---|---|---|
| JK | MG | [illegible] | |

WIRING DIAGRAM-INTERNAL
INSTRUMENT POWER CIRCUIT
CL. 15 CIRCULAR CHART (152)

MINNEAPOLIS-HONEYWELL REG. CO.
BROWN INSTRUMENTS DIVISION
PHILADELPHIA, PA., U. S. A. MP

| SCALE NONE | DRAWING NO 371548 | CL. 3 |
|---|---|---|
| DATE 1-26-63 | | |

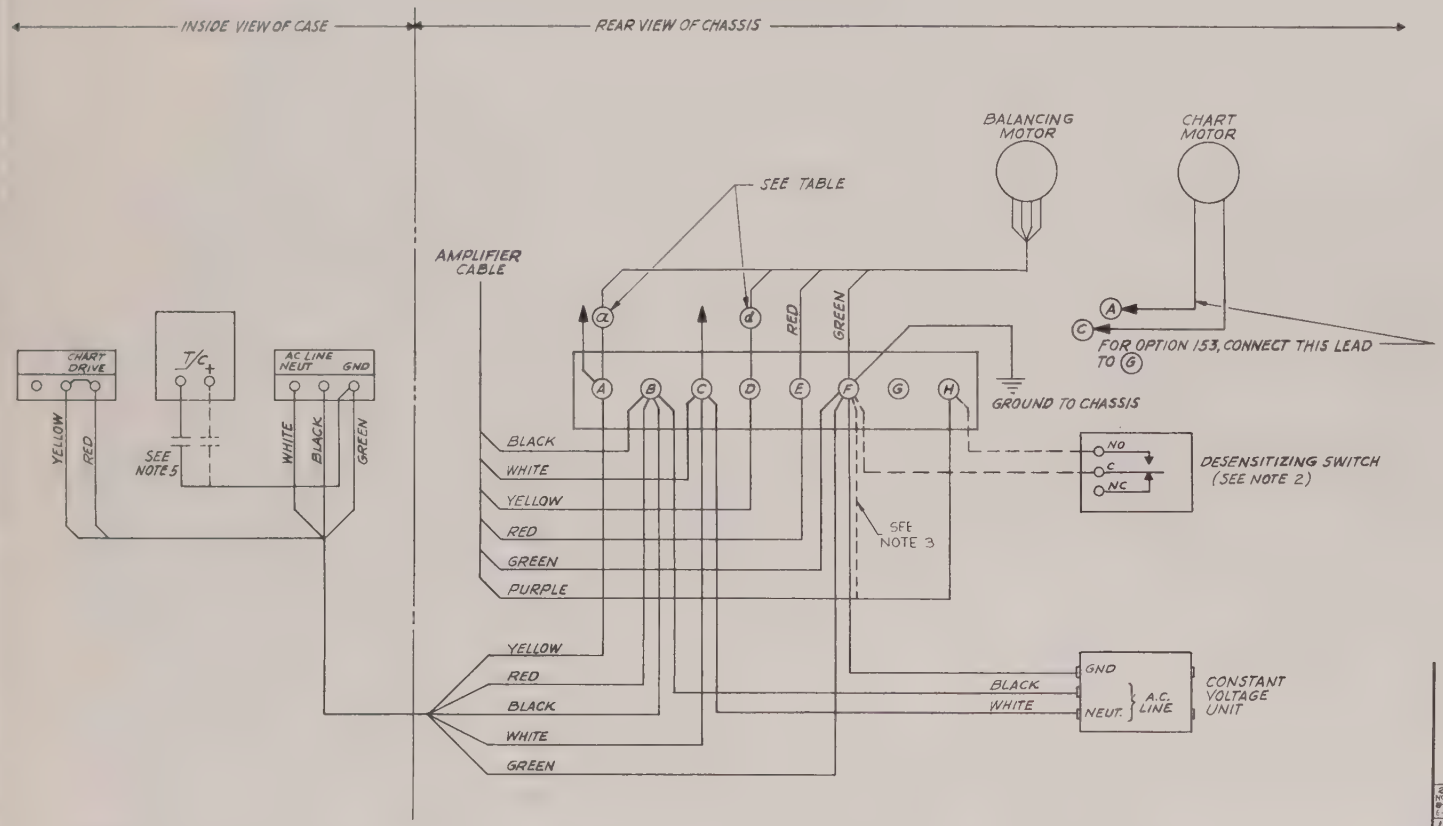


NOTES:-

1.- REFER TO 653671-1 FOR TERMINAL BLOCK LOCATIONS.

2.- DESENSITIZING USED ONLY ON 15201822, 15201835, AND 15201836 WITHOUT TABLE VII 060.

3.- WHEN AN AMPLIFIER WITHOUT A BURNOUT SWITCH IS USED AND/OR DESENSITIZING SWITCH IS OMITTED CONNECT PURPLE AMPLIFIER LEAD TO GROUND TERMINAL (F).

4.- FOR OPTION 154, REFER TO W/D 371563

5.- ONE FILTER CAPACITOR USED ON ALL T/C RANGES ABOVE 850°C. (OR 1575°F.). IT IS CONNECTED AS SHOWN BY THE SOLID LINES. ON ALL TYPE "R" AND "S" RANGES, TWO FILTER CAPACITORS ARE USED AS SHOWN.

| BALANCE SPEED | RANGE | (a) LEAD COLOR | (d) LEAD COLOR |
|---|---|---|---|
| 1 OR 2 | NORMAL | YELLOW | WHITE |
| 1 OR 2 | REVERSED | WHITE | YELLOW |
| 3 | NORMAL | WHITE | YELLOW |
| 3 | REVERSED | YELLOW | WHITE |

2 8-5-63 EO 2530
NOTE 3) REVISED NOTE 3
8-(10) MADE WIRES FROM SWITCH DOTTED
(E-8) ADDED WIRE & "SEE NOTE 3"

1. 1-26-63 7632-1P
FORM NO. F-2148-A

ISSUE NO. APP.

APP. FOR RELEASE — ENGR. Kraynak — DATE 2-14-63 — SECT. HD. — DATE

APP. FOR VENDORS QUOTATION — ENGR — DATE — SECT. HD. — DATE

| a | b | c | d | e | f | g | h | j |
|---|---|---|---|---|---|---|---|---|
| TOKYO | ✓ | HERMODOLE | ✓ | | | | | |
| M-H | | | | | | | | |
| TORONTO | ✓ | | | | | | | |

REPRODUCTION LOCATED AT — JOB NOS. — USED ON

LIMITS—ON DIMENSIONS WHERE LIMITS ARE NOT SHOWN USE THE FOLLOWING —
ON ALL DECIMAL DIMENSIONS ± .005
ON ALL OTHER LINEAR DIMENSIONS ± 1/64
ANGULAR DIMENSIONS ± 1°

DES. ENGR. GK — DRAWN MG — CHECKED WB — APPROVED

WIRING DIAGRAM-INTERNAL
INSTRUMENT POWER CIRCUIT
CL. 15 CIRCULAR CHART (152)
WITHOUT POWER SWITCH
TABLE VII 019 OR 154

MINNEAPOLIS-HONEYWELL REG. CO.
BROWN INSTRUMENTS DIVISION
PHILADELPHIA, PA., U.S.A. MP

SCALE NONE — DATE 1-26-63 — DRAWING NO 371549 — CL. 3

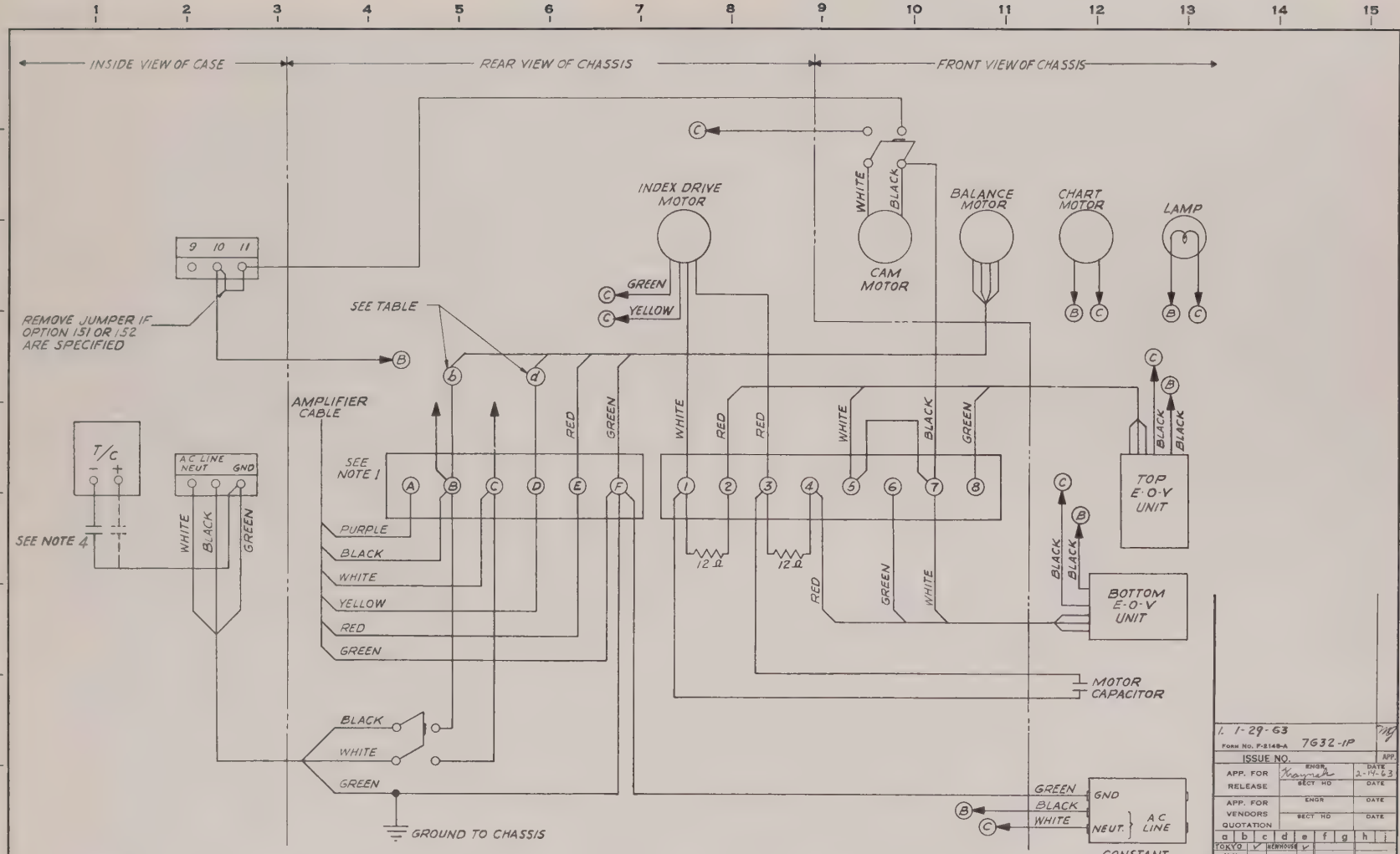


NOTES:-

1.- REFER TO 653671-1 FOR TERMINAL BLOCK LOCATIONS.

2.- WITH TABLE VII OPTIONS 206 & 207 (4X AMP), CONNECT PURPLE LEAD TO TERMINAL (F) - GROUND.

3.- POWER SWITCH LOCATED ON FRONT OF CHASSIS.

4.- ONE FILTER CAPACITOR USED ON ALL T/C RANGES ABOVE 850°C OR 1575°F. IT IS CONNECTED AS SHOWN BY THE SOLID LINES. ON ALL TYPE "R" AND "S" RANGES, TWO FILTER CAPACITORS ARE USED AS SHOWN.

| BALANCE SPEED | RANGE | (b) LEAD COLOR | (d) LEAD COLOR |
|---|---|---|---|
| 1 & 2 | NORMAL | YELLOW | WHITE |
| 1 & 2 | REVERSED | WHITE | YELLOW |
| 3 | NORMAL. | WHITE | YELLOW |
| 3 | REVERSED | YELLOW | WHITE |

1. 1-29-63

FORM NO. F-2148-A 7632-1P

ISSUE NO. APP.

APP. FOR RELEASE — ENGR. Kraynek — DATE 2-14-63 — SECT HD — DATE

APP. FOR VENDORS QUOTATION — ENGR — DATE — SECT HD — DATE

| a | b | c | d | e | f | g | h | i |
|---|---|---|---|---|---|---|---|---|
| TOKYO | ✓ | NEWHOUSE | ✓ | | | | | |
| M-H | | | | | | | | |
| TORONTO | ✓ | | | | | | | |
| [redacted] | | | | | 7632 | | | |

REPRODUCTION LOCATED AT — JOB NOS. — USED ON

LIMITS—ON DIMENSIONS WHERE LIMITS ARE NOT SHOWN USE THE FOLLOWING — ON ALL DECIMAL DIMENSIONS ± .005 ON ALL OTHER LINEAR DIMENSIONS ± 1/64 ANGULAR DIMENSIONS ± 1°

DES ENGR. — DRAWN — CHECKED — APPROVED

WIRING DIAGRAM - INTERNAL INSTRUMENT POWER CIRCUIT CL 15 CIRCULAR CHART (152) CAM PROGRAM PROPORTIONAL CONTROL

MINNEAPOLIS-HONEYWELL REG. CO.
BROWN INSTRUMENTS DIVISION
PHILADELPHIA, PA., U. S. A. MP

SCALE NONE — DATE 1-29-63 — DRAWING NO. 371550 — CL. 3

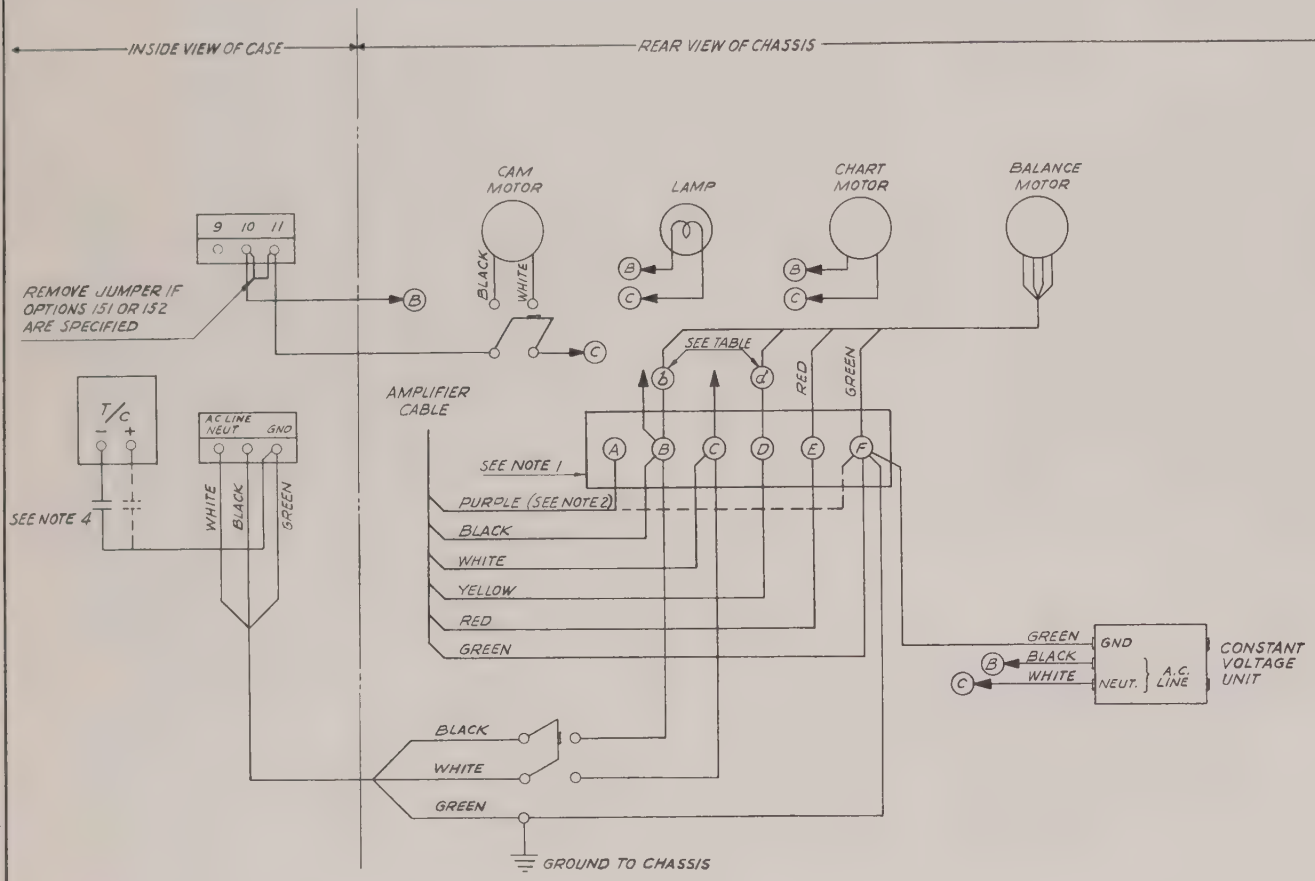


NOTES:-

1.- REFER TO 653671-1 FOR TERMINAL BLOCK LOCATION.

2.- WITH TABLE VII OPTIONS 206 & 207 (4X AMP), CONNECT PURPLE LEAD TO TERMINAL (F) GROUND.

3.- POWER SWITCH LOCATED ON FRONT OF CHASSIS.

4.- ONE FILTER CAPACITOR USED ON ALL T/C RANGES ABOVE 850°C. (OR 1575°F.). IT IS CONNECTED AS SHOWN BY SOLID LINES. ON ALL TYPE "R" AND "S" RANGES, TWO FILTER CAPACITORS USED AS SHOWN.

| BALANCE SPEED | RANGE | (b) LEAD COLOR | (d) LEAD COLOR |
|---|---|---|---|
| 1 & 2 | NORMAL | YELLOW | WHITE |
| 1 & 2 | REVERSED | WHITE | YELLOW |
| 3 | NORMAL | WHITE | YELLOW |
| 3 | REVERSED | YELLOW | WHITE |

1. 1-29-63 mg
FORM NO P-2148-A 7632-1P
ISSUE NO. APP.
APP. FOR RELEASE ENGR. [illegible] DATE 2-14-63
SECT. HD. DATE
APP. FOR VENDORS QUOTATION ENGR. DATE
SECT. HD. DATE

| a | b | c | d | e | f | g | h | i |
|---|---|---|---|---|---|---|---|---|
| TOKYO | V | NEWHOUSE | V | | | | | |
| M H TORONTO | V | | | | | | | |
| LONDON | | | | | 7632 | | | |

REPRODUCTION LOCATED AT | JOB NOS. | USED ON

LIMITS—ON DIMENSIONS WHERE LIMITS ARE NOT SHOWN USE THE FOLLOWING — ON ALL DECIMAL DIMENSIONS ± .005 ON ALL OTHER LINEAR DIMENSIONS ±1/64 ANGULAR DIMENSIONS ± 1°

| DES. ENGR. | DRAWN | CHECKED | APPROVED |
|---|---|---|---|
| GK | mg | | |

WIRING DIAGRAM-INTERNAL
INSTRUMENT POWER CIRCUIT
CL 15 CIRCULAR CHART (152)
CAM PROGRAM
PNEUMATIC OR CONTACT CONTROL

MINNEAPOLIS-HONEYWELL REG. CO.
BROWN INSTRUMENTS DIVISION
PHILADELPHIA, PA., U. S. A. MP

SCALE NONE | DRAWING NO. 371551 | CL. 3
DATE 1-29-63

## ACTUATIONS-01,03,11,13,17 OR 30

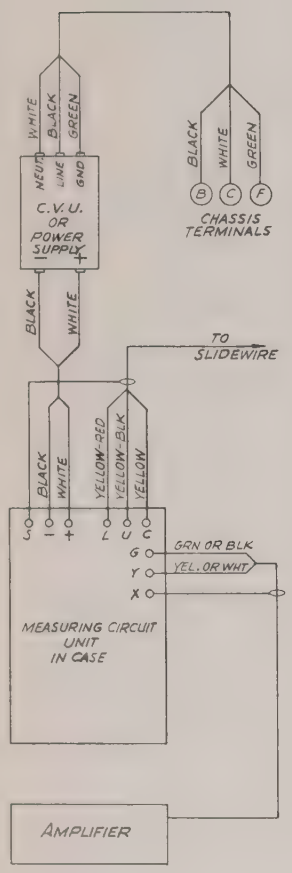


## ACTUATION 57
### MAGNETIC FLOWMETER

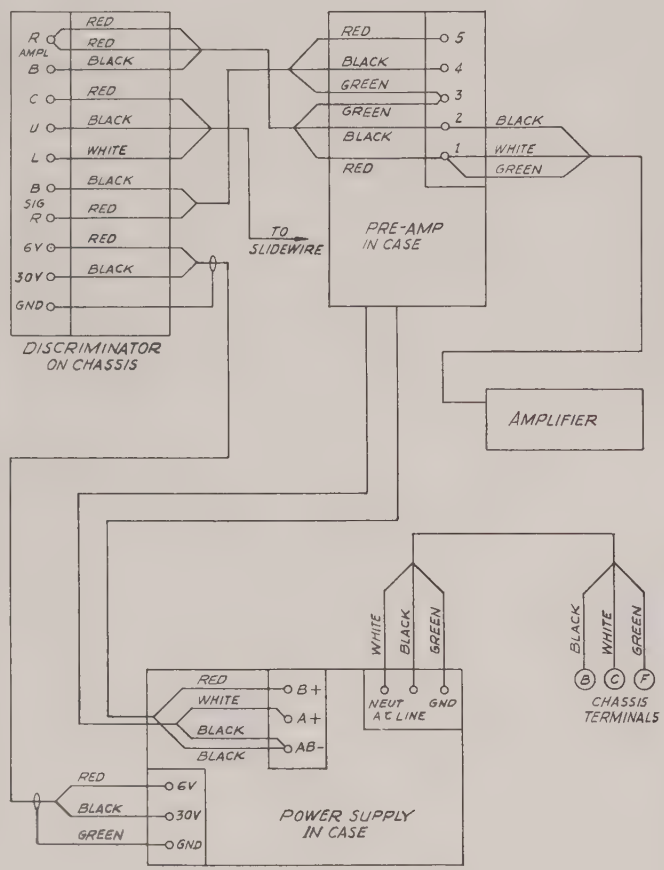


## ACTUATION 90 OR 91
### INDUCTANCE BRIDGE

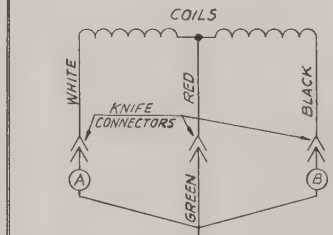


| ACT. | A | B |
|---|---|---|
| 90 | WHITE | BLACK |
| 91 | BLACK | WHITE |

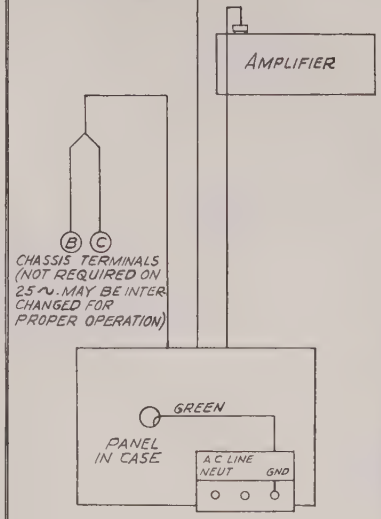


1. 1-30-63 mg

FORM NO. F-2148-A 7632-1P

| ISSUE NO. | | APP. |
|---|---|---|
| APP. FOR RELEASE | ENGR. Kaestner SECT. HD. | DATE 2-19-63 DATE |
| APP. FOR VENDORS QUOTATION | ENGR. SECT. HD. | DATE DATE |

| a | b | c | d | e | f | g | h | i |
|---|---|---|---|---|---|---|---|---|
| TOKYO | ✓ | HONOLULU | ✓ | | | | | |
| M-H | | | | | | | | |
| TORONTO | ✓ | | | | | | | |
| | | | | 7632 | | | | |

REPRODUCTION LOCATED AT | JOB NOS. | USED ON

LIMITS—ON DIMENSIONS WHERE LIMITS ARE NOT SHOWN USE THE FOLLOWING:—
ON ALL DECIMAL DIMENSIONS ± .005
ON ALL OTHER LINEAR DIMENSIONS ± 1/64
ANGULAR DIMENSIONS ± 1°

| DES. ENGR | DRAWN | CHECKED | APPROVED |
|---|---|---|---|
| GK | JHB | | |

WIRING DIAGRAM-INTERNAL
CL 15 CIRCULAR CHART (152)
ACTUATIONS
TABLE II

MINNEAPOLIS-HONEYWELL REG. CO.
BROWN INSTRUMENTS DIVISION
PHILADELPHIA, PA., U.S.A. MP

| SCALE | DRAWING NO. | CL. |
|---|---|---|
| NONE | 371552 | 3 |
| DATE 1-30-63 | | |

## CONTROL FORM 131

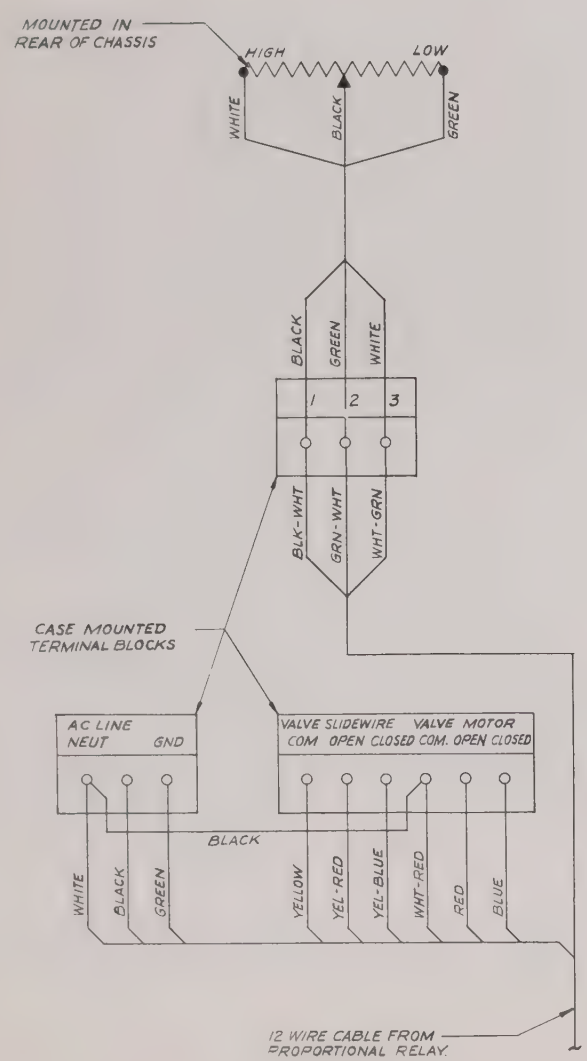


## CONTROL FORMS 013, 014, & 015

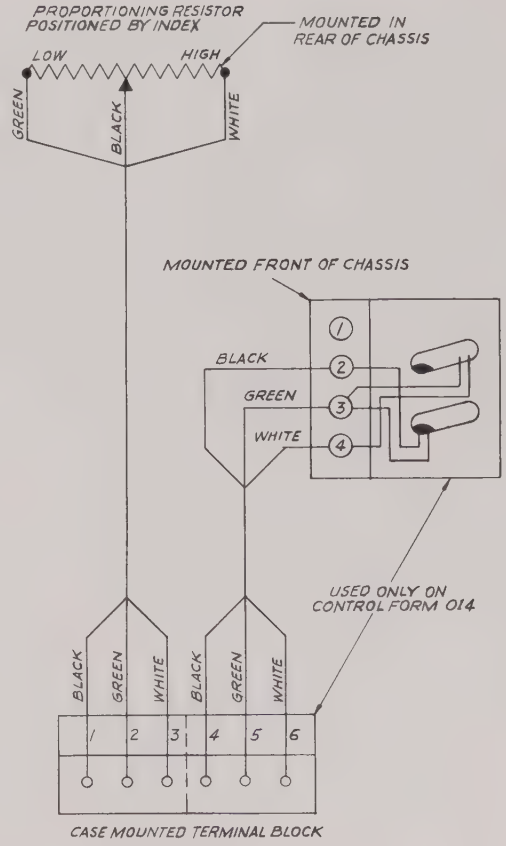


| | | | |
|---|---|---|---|
| 1. 1-31-63 | | | |
| Form No. P-2148-A | 7632-1P | | APP. |
| ISSUE NO. | | | |
| APP. FOR RELEASE | ENGR. Krieger | | DATE 2-19-63 |
| | SECT HD | | DATE |
| APP. FOR VENDORS QUOTATION | ENGR | | DATE |
| | SECT HD | | DATE |

| a | b | c | d | e | f | g | h | i |
|---|---|---|---|---|---|---|---|---|
| TOKYO | ✓ | NEWTOWN | ✓ | | | | | |
| M-H | | | | | | | | |
| TORONTO | ✓ | | | | | | | |

| REPRODUCTION LOCATED AT | JOB NOS. | USED ON |
|---|---|---|
| | 7632 | |

LIMITS—ON DIMENSIONS WHERE LIMITS ARE NOT SHOWN USE THE FOLLOWING —
ON ALL DECIMAL DIMENSIONS ± .005
ON ALL OTHER LINEAR DIMENSIONS ± 1/64
ANGULAR DIMENSIONS ± 1°

| DES. ENGR | DRAWN | TRACED | APPROVED |
|---|---|---|---|
| GK | MP | DS | |

WIRING DIAGRAM-INTERNAL CL IS CIRCULAR CHART (152) PROPORTIONAL CONTROL TABLE IV 013, 014, 015, & 031

MINNEAPOLIS-HONEYWELL REG. CO.
BROWN INSTRUMENTS DIVISION
PHILADELPHIA, PA., U. S. A. MP

| SCALE | DRAWING NO | |
|---|---|---|
| NONE | 371553 | 3 |
| DATE 1-31-63 | | |

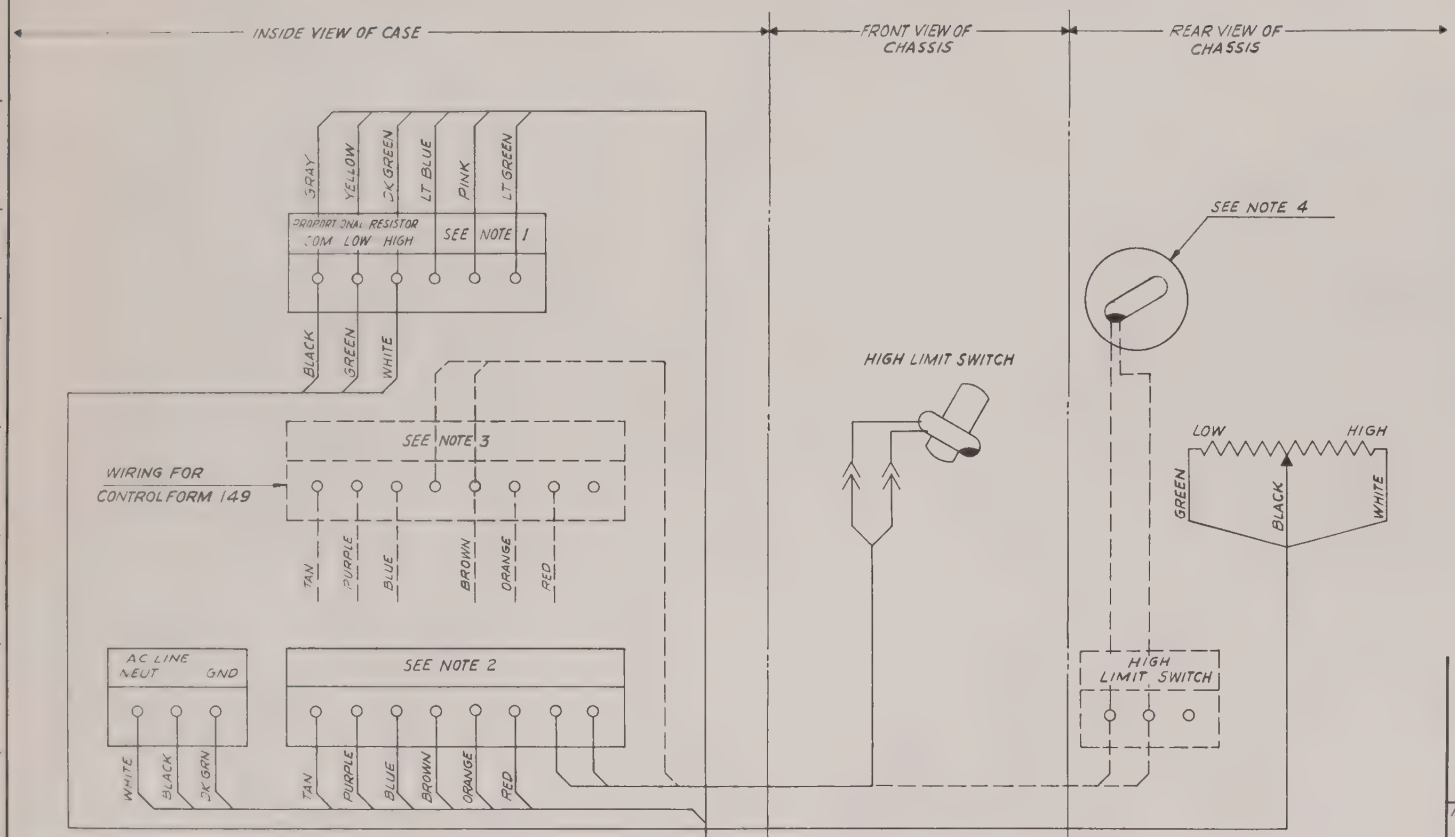


NOTES:-

1.-

| CONTROLFORM | MARKER STRIP | | |
|---|---|---|---|
| 148 | VALUE SLIDEWIRE COMMON | HIGH | LOW |
| 149 | 51 | 52 | 53 |
| 150 | 51 | DC OUTPUT NEG. | POS. |

2.-

| CONTROLFORM | 8 POINT MARKER STRIP | | | | | | |
|---|---|---|---|---|---|---|---|
| 148 | PROGRAM | VALVE MOTOR COMMON | LOW | POWER | HIGH | 240V | HIGH LIMIT SWITCH |
| 50 | PROGRAM | 47 | 48 | 49 | 50 | 240V | HIGH LIMIT SWITCH |

3.-

| CONTROLFORM | 8 POINT MARKER STRIP | | | | | | |
|---|---|---|---|---|---|---|---|
| 49 | PROGRAM | 46 | HEAT | LIMIT SWITCH | POWER | COOL | 240V |

NOTE

4.- ON CAM PROGRAM CONTROLLERS, THIS HIGH LIMIT SWITCH IS USED INSTEAD OF THE ONE ON THE FRONT OF CHASSIS SHOWN ABOVE.

1. 1-31-63

FORM NO. F-2146-A 7632-1P

ISSUE NO. APP

APP. FOR RELEASE — ENGR Kraynak — DATE 2-14-63 — SECT HD. — DATE

APP. FOR VENDORS QUOTATION — ENGR. — DATE — SECT HD — DATE

| a | b | c | d | e | f | g | h | i |
|---|---|---|---|---|---|---|---|---|
| TOKYO | ✓ | NEWHOUSE | ✓ | | | | | |
| M-H | | | | | | | | |
| TORONTO | ✓ | | | | | | | |
| [redacted] | | | | | 7632 | | | |

REPRODUCTION LOCATED AT — JOB NOS — USED ON

LIMITS—ON DIMENSIONS WHERE LIMITS ARE NOT SHOWN USE THE FOLLOWING —
ON ALL DECIMAL DIMENSIONS ± .005
ON ALL OTHER LINEAR DIMENSIONS ± 1/64
ANGULAR DIMENSIONS ± 1°

DES. ENGR JK — DRAWN MJ — CHECKED WD — APPROVED

WIRING DIAGRAM-INTERNAL
CL 15 CIRCULAR CHART (152)
PROPORTIONAL CONTROL
TABLE IV 148, 149, 150

MINNEAPOLIS-HONEYWELL REG. CO.
BROWN INSTRUMENTS DIVISION
PHILADELPHIA PA U S A MP

SCALE NONE — DATE 1-31-63 — DRAWING NO 371554 — CL 3

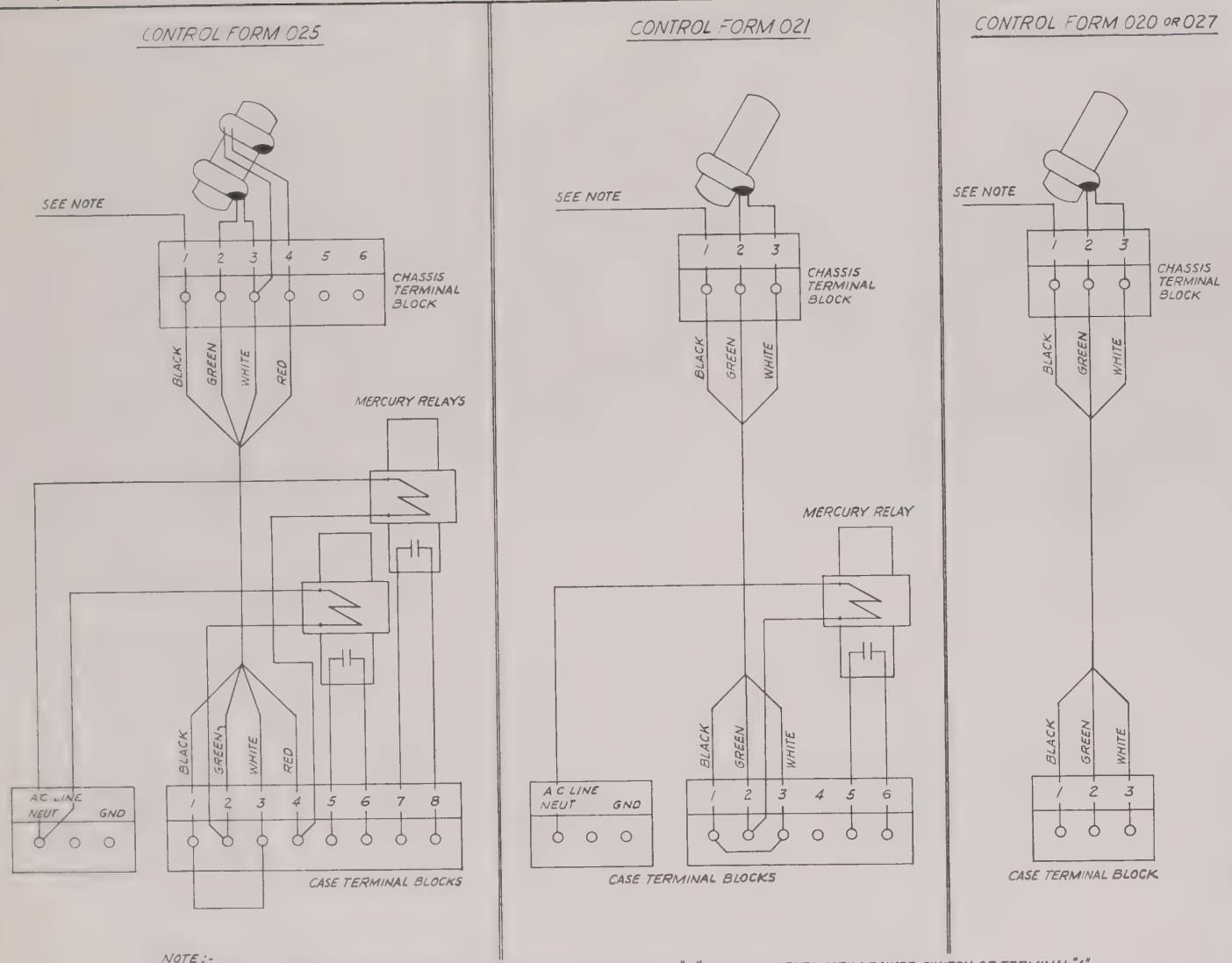


NOTE:-
THIS LEAD IS CONNECTED TO CHASSIS TERMINAL BLOCK, TERMINAL "B" ON INSTRUMENTS WITH A POWER SWITCH OR TERMINAL "A" ON INSTRUMENTS WITHOUT A POWER SWITCH.

1. 2-1-63 — Form No. F-2148-A — 7G32-1P — Mg

ISSUE NO. — APP

| | | |
|---|---|---|
| APP. FOR RELEASE | ENGR [signature] | DATE 2-14-63 |
| | SECT HD | DATE |
| APP FOR VENDORS QUOTATION | ENGR | DATE |
| | SECT HD | DATE |

| a | b | c | d | e | f | g | h | i |
|---|---|---|---|---|---|---|---|---|
| TOKYO | ✓ | NEWMOOSE | ✓ | | | | | |
| M H | | | | | | | | |
| TORONTO | ✓ | | | | | | | |

REPRODUCTION LOCATED AT — JOB NOS — USED ON

LIMITS—ON DIMENSIONS WHERE LIMITS ARE NOT SHOWN USE THE FOLLOWING —
ON ALL DECIMAL DIMENSIONS ± .005
ON ALL OTHER LINEAR DIMENSIONS ± 1/64
ANGULAR DIMENSIONS ± 1°

| DES. ENGR | DRAWN | CHECKED | APPROVED |
|---|---|---|---|
| GK | mg | WP | |

WIRING DIAGRAM-INTERNAL
CL IS CIRCULAR CHART (152)
CONTACT CONTROL
TABLE IV 020, 021, 025, & 027

MINNEAPOLIS-HONEYWELL REG. CO.
BROWN INSTRUMENTS DIVISION
PHILADELPHIA, PA., U. S. A. MP

SCALE NONE — DATE 2-1-63 — DRAWING NO 371555 — CL 3

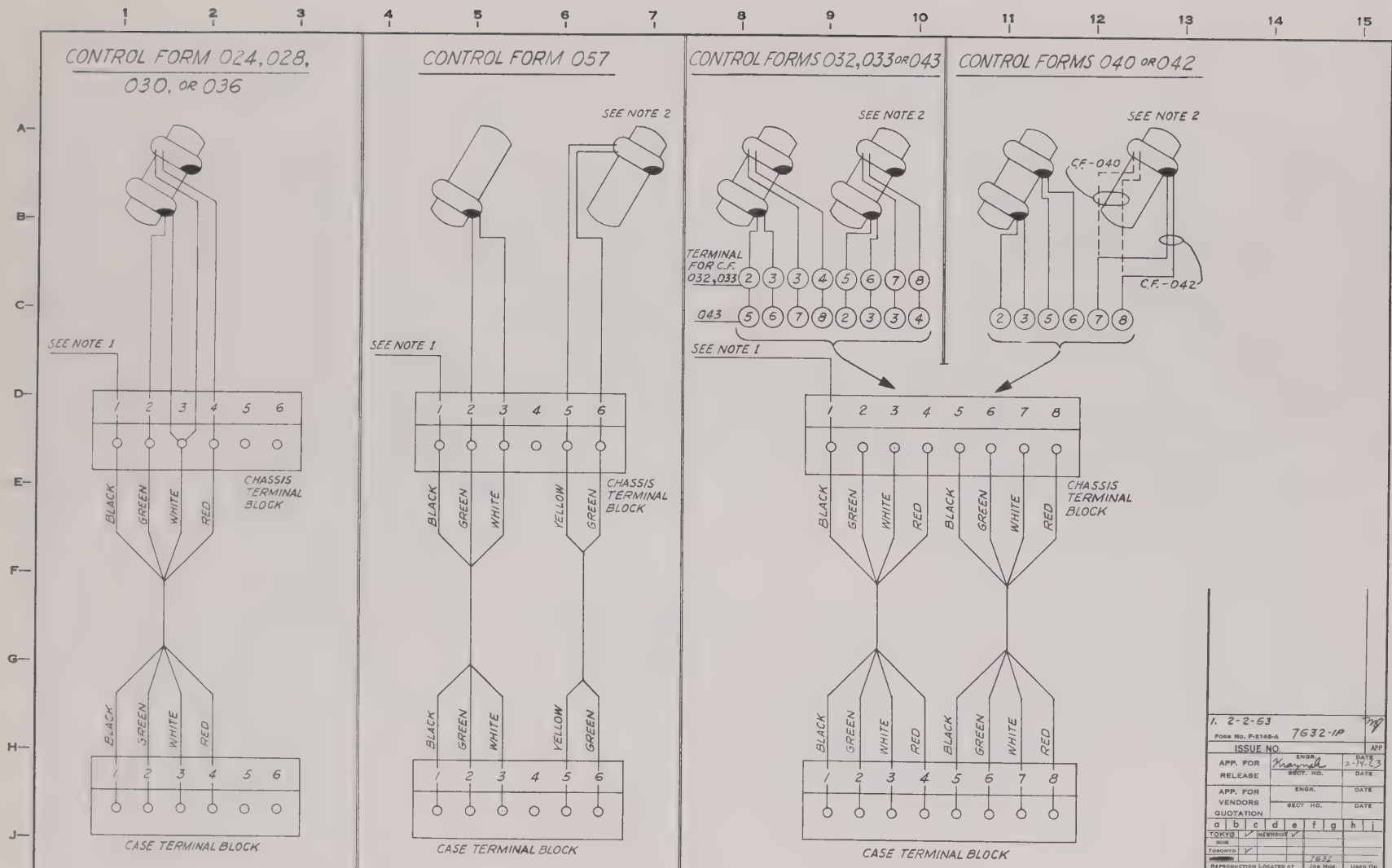


NOTES:-

1. THIS LEAD IS CONNECTED TO CHASSIS TERMINAL BLOCK, TERMINAL "B" ON INSTRUMENTS WITH A POWER SWITCH OR TERMINAL "A" ON INSTRUMENTS WITHOUT A POWER SWITCH.
2. SWITCH UNIT ON THE RIGHT IS NEXT TO THE CHASSIS.

| | | | |
|---|---|---|---|
| 1. 2-2-63 | | | |
| FORM NO. F-2148-A | 7632-1P | | |
| ISSUE NO. | | | APP |
| APP. FOR RELEASE | ENGR. Kraynak | DATE 2-14-63 | |
| | SECT. NO. | DATE | |
| APP. FOR VENDORS QUOTATION | ENGR. | DATE | |
| | SECT NO. | DATE | |

| a | b | c | d | e | f | g | h | i |
|---|---|---|---|---|---|---|---|---|
| TOKYO | ✓ | NEWHOUSE | ✓ | | | | | |
| [redacted] | | | | | | | | |
| TORONTO | ✓ | | | | | | | |
| [redacted] | | | | | 7632 | | | |
| REPRODUCTION LOCATED AT | | | | | JOB NOS. | | USED ON | |

LIMITS—ON DIMENSIONS WHERE LIMITS ARE NOT SHOWN USE THE FOLLOWING
ON ALL DECIMAL DIMENSIONS ± .005
ON ALL OTHER LINEAR DIMENSIONS ± 1/64
ANGULAR DIMENSIONS ± 1°

| DES. ENGR. | DRAWN | CHECKED | APPROVED |
|---|---|---|---|
| JK | MG | WB | |

WIRING DIAGRAM-INTERNAL
CL 15 CIRCULAR CHART (152)
CONTACT CONTROL TABLE IV
024, 028, 030, 032, 033, 036, 040, 042, 043, & 057

MINNEAPOLIS-HONEYWELL REG. CO.
BROWN INSTRUMENTS DIVISION
PHILADELPHIA, PA., U. S. A. MP

| SCALE | DRAWING NO | CL. |
|---|---|---|
| NONE | 371556 | 3 |
| DATE 2-2-63 | | |

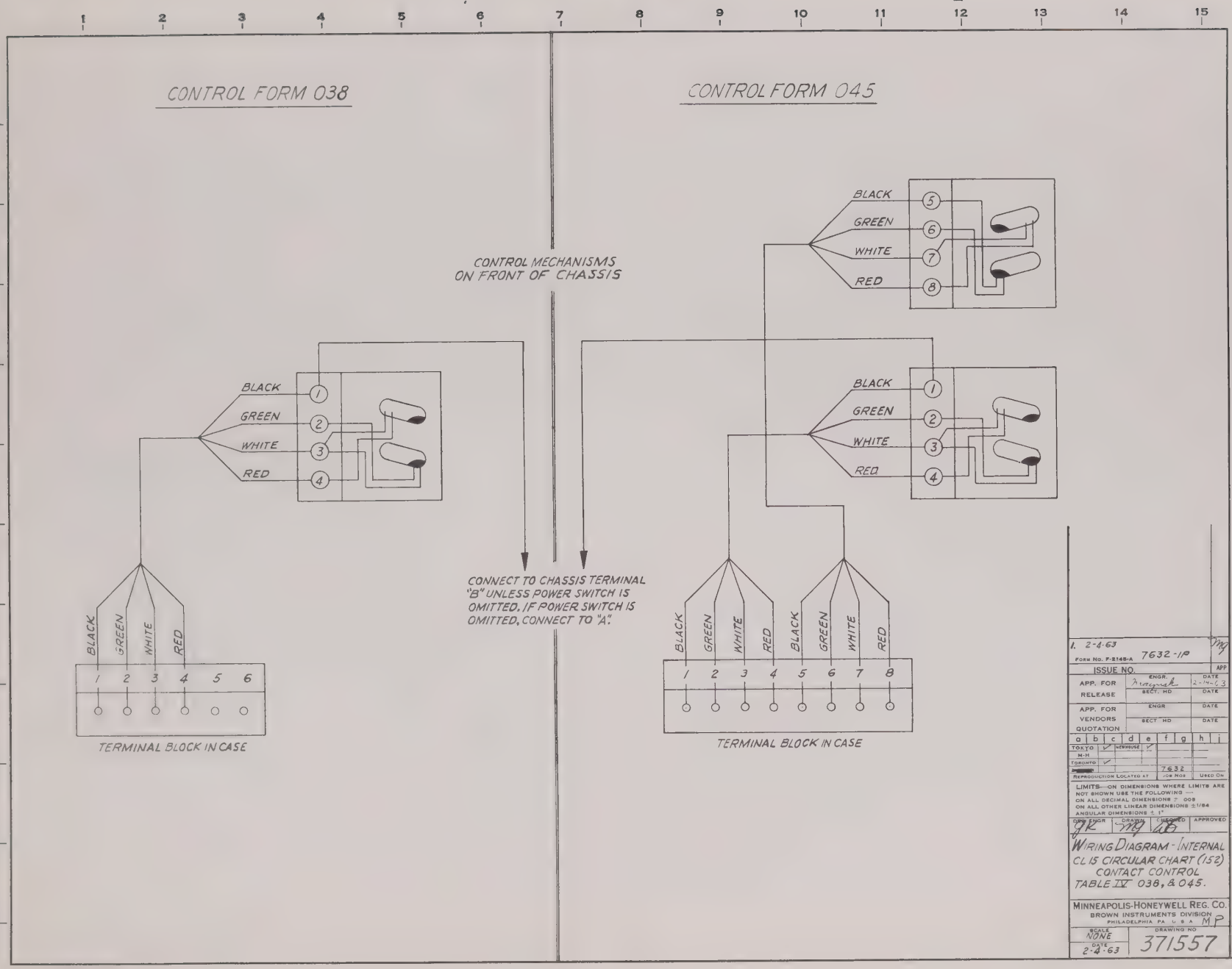
CONTROL FORM 038
CONTROL FORM 045
CONTROL MECHANISMS ON FRONT OF CHASSIS
CONNECT TO CHASSIS TERMINAL "B" UNLESS POWER SWITCH IS OMITTED. IF POWER SWITCH IS OMITTED, CONNECT TO "A".
BLACK
GREEN
WHITE
RED
TERMINAL BLOCK IN CASE
TERMINAL BLOCK IN CASE
1. 2-4-63
FORM NO. F-2145-A
7632-1P
ISSUE NO.
APP. FOR RELEASE
APP. FOR VENDORS QUOTATION
ENGR.
SECT. HD
DATE
2-14-63
TOKYO
M-H
TORONTO
NEWHOUSE
7632
REPRODUCTION LOCATED AT
JOB NOS
USED ON
LIMITS—ON DIMENSIONS WHERE LIMITS ARE NOT SHOWN USE THE FOLLOWING —
ON ALL DECIMAL DIMENSIONS ± .005
ON ALL OTHER LINEAR DIMENSIONS ±1/64
ANGULAR DIMENSIONS ± 1°
DRG ENGR
DRAWN
CHECKED
APPROVED
WIRING DIAGRAM - INTERNAL
CL 15 CIRCULAR CHART (152)
CONTACT CONTROL
TABLE IV 038, & 045.
MINNEAPOLIS-HONEYWELL REG. CO.
BROWN INSTRUMENTS DIVISION
PHILADELPHIA PA U S A
MP
SCALE
NONE
DATE
2-4-63
DRAWING NO
371557
CL.
3

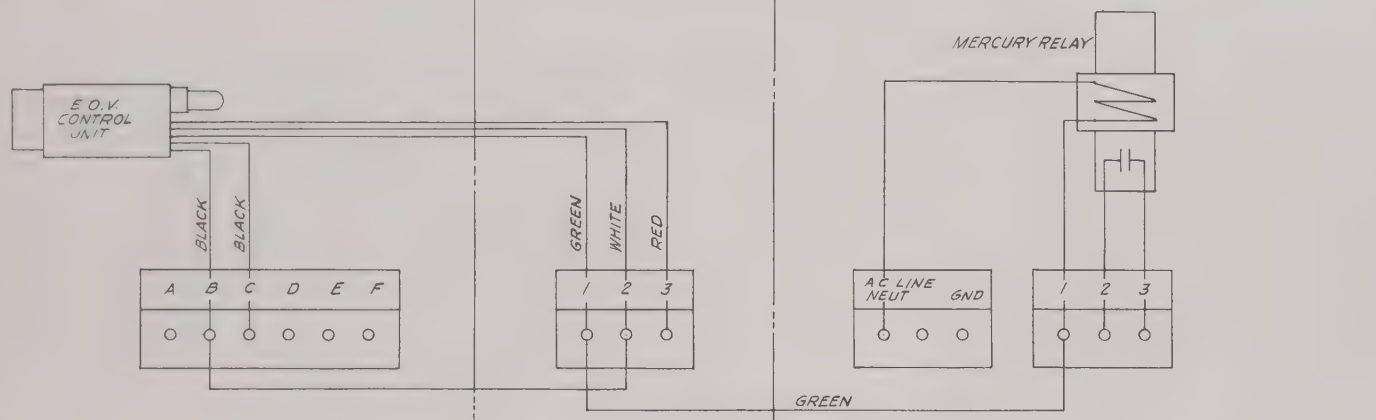


CONTROL FORM 211

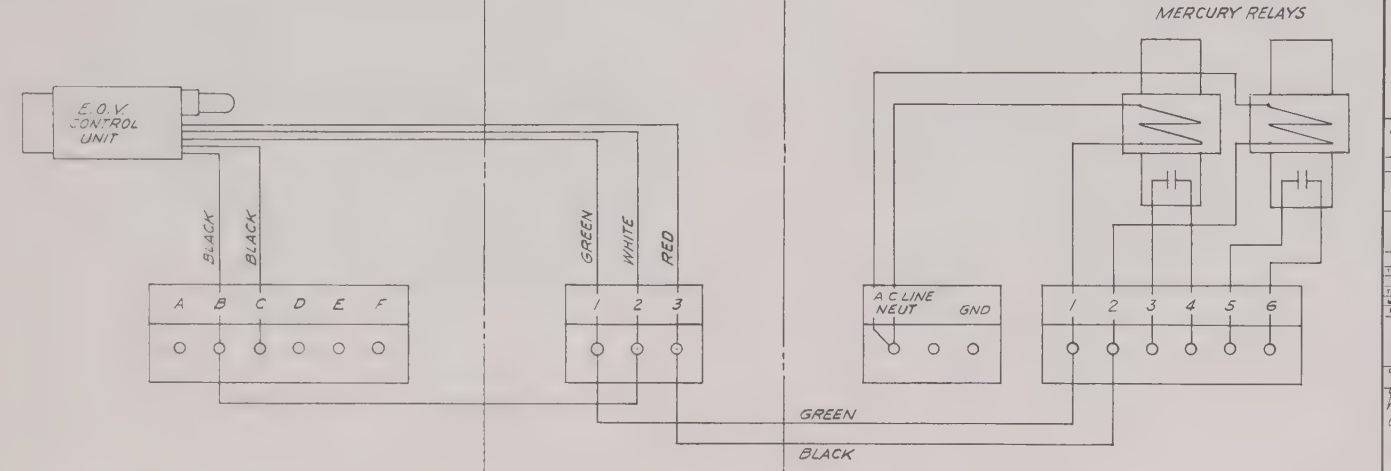


CONTROL FORM 246

1. 2-4 63 7632-1P

Form No. F-2148-A

| ISSUE NO. | | APP |
|---|---|---|
| APP FOR RELEASE | ENGR Harper | DATE 2-19-63 |
| | SECT HD | DATE |
| APP FOR VENDORS QUOTATION | ENGR | DATE |
| | SECT HD | DATE |

| a | b | c | d | e | f | g | h | j |
|---|---|---|---|---|---|---|---|---|
| TOKYO | ✓ | NEW HOUSE | ✓ | | | | | |
| M H | | | | | | | | |
| TORONTO | ✓ | | | | | | | |

7632

REPRODUCTION LOCATED AT | JOB NO. | USED ON

LIMITS—ON DIMENSIONS WHERE LIMITS ARE NOT SHOWN USE THE FOLLOWING —
ON ALL DECIMAL DIMENSIONS ± .005
ON ALL OTHER LINEAR DIMENSIONS ± 1/64
ANGULAR DIMENSIONS ± 1°

| DES. ENGR | DRAWN | CHECKED | APPROVED |
|---|---|---|---|
| GK | MGM | | |

WIRING DIAGRAM-INTERNAL
CL 15 CIRCULAR CHART (152)
CONTACT CONTROL
TABLE IV 211, 246

MINNEAPOLIS-HONEYWELL REG. CO.
BROWN INSTRUMENTS DIVISION
PHILADELPHIA, PA., U. S. A. MP

| SCALE | DRAWING NO. | CL |
|---|---|---|
| NONE | 371558 | 3 |
| DATE 2-4-63 | | |

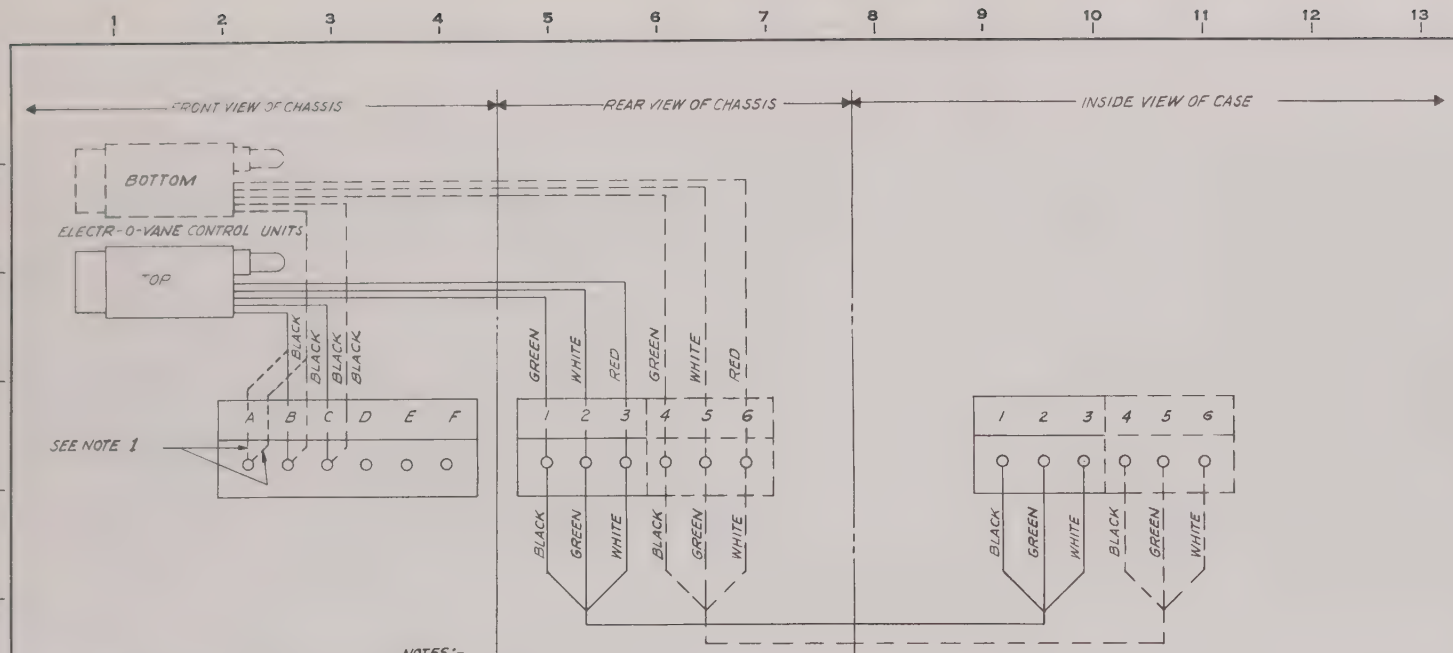


CONTROL FORM 239 & 226
(SEE NOTE 2)

NOTES:-
1.- WITH TABLE VII 019 (POWER SWITCH OMITTED), CONNECT THESE LEADS TO TERMINAL "A".
2.- CONTROL FORM 239 SHOWN ABOVE BY SOLID AND DASH LINES;
CONTROL FORM 226 SHOWN BY SOLID LINES ONLY.

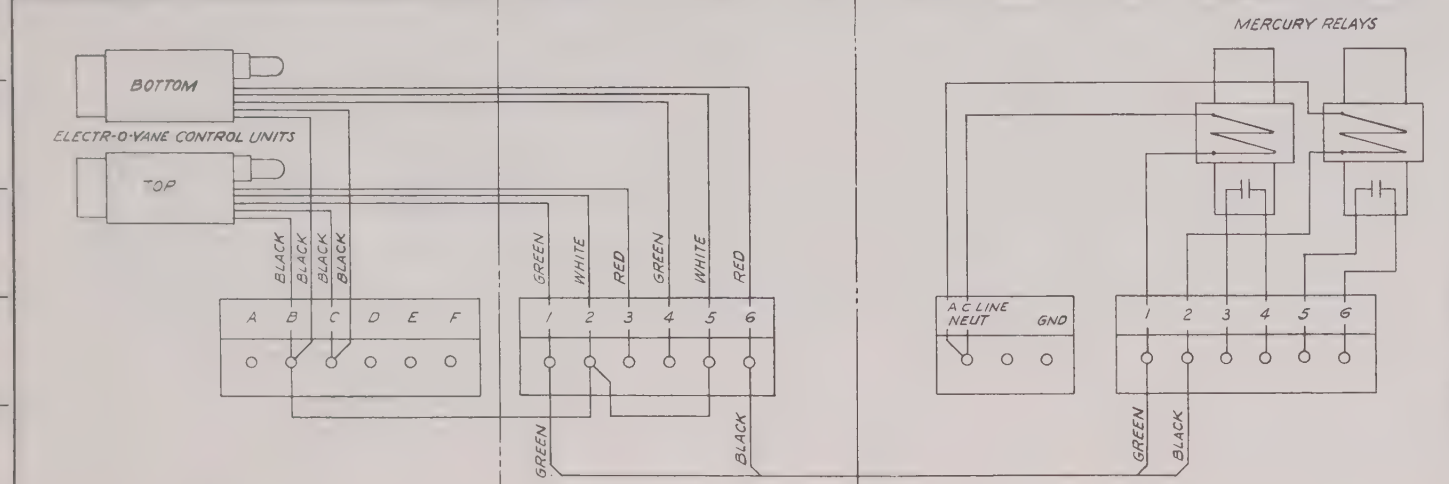


CONTROL FORM 238

1. 2-5-63 7632-1P
FORM NO. F-2148-A
ISSUE NO. APP

| APP. FOR RELEASE | ENGR Kronzek | DATE 2-14-63 |
|---|---|---|
| | SECT HD | DATE |
| APP FOR VENDORS QUOTATION | ENGR. | DATE |
| | SECT HD | DATE |

| a | b | c | d | e | f | g | h | i |
|---|---|---|---|---|---|---|---|---|
| TOKYO | ✓ | NEWHOUSE | ✓ | | | | | |
| M H | | | | | | | | |
| TORONTO | ✓ | | | | | | | |
| [redacted] | | | | | 7632 | | | |
| REPRODUCTION LOCATED AT | | | | | JOB NOS | | USED ON | |

LIMITS—ON DIMENSIONS WHERE LIMITS ARE NOT SHOWN USE THE FOLLOWING —
ON ALL DECIMAL DIMENSIONS ± .005
ON ALL OTHER LINEAR DIMENSIONS ± 1/64
ANGULAR DIMENSIONS ± 1°

| DES. ENGR | DRAWN | CHECKED | APPROVED |
|---|---|---|---|
| GK | MG | WB | |

WIRING DIAGRAM-INTERNAL
CL 15 CIRCULAR CHART (152)
CONTACT CONTROL
TABLE IV 238, 239 & 226

MINNEAPOLIS-HONEYWELL REG. CO.
BROWN INSTRUMENTS DIVISION
PHILADELPHIA, PA., U. S. A. MP

| SCALE | DRAWING NO | CL |
|---|---|---|
| NONE | 371559 | 3 |
| DATE 2-5-63 | | |

## OPTION 018
240 VOLT TRANSFORMER

120 VOLT TERMINAL BLOCK MOUNTED IN TANDEM BENEATH 240 VOLT BLOCK.

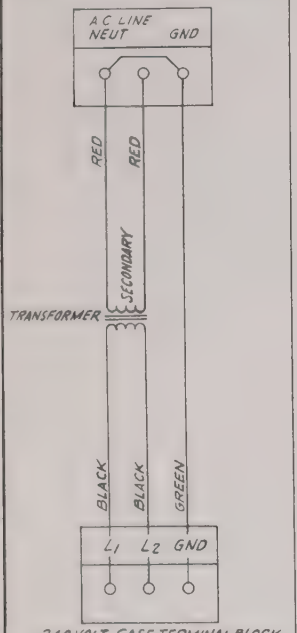


240 VOLT CASE TERMINAL BLOCK

## OPTION 061
INCANDESCENT LIGHTING

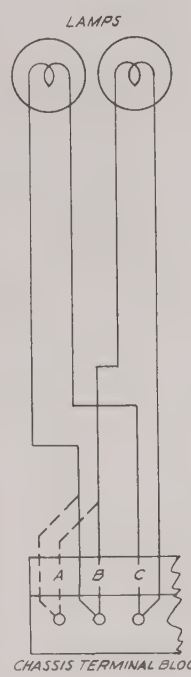


CHASSIS TERMINAL BLOCK

CONNECT TO "A" INSTEAD OF "B" IF POWER SWITCH HAS BEEN OMITTED. (TABLE VII OPTION 019 OR 154)

## OPTION 062
FLUORESCENT LIGHTING

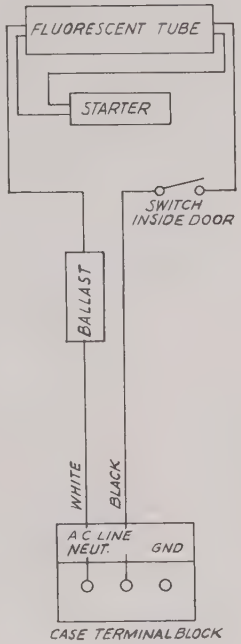


CASE TERMINAL BLOCK

## OPTION 070
TRANSMITTING SLIDEWIRE

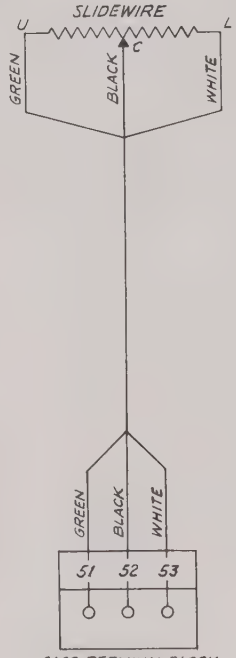


CASE TERMINAL BLOCK

## OPTION 161, 162 OR 163
OPERATION PEN

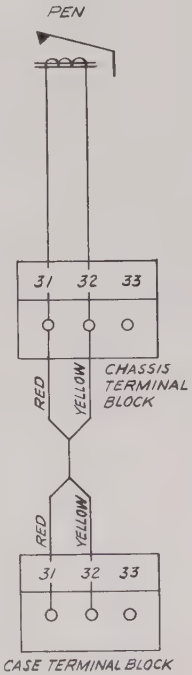


CASE TERMINAL BLOCK

| | | | | | | | | | |
|---|---|---|---|---|---|---|---|---|---|
| 1. 2-5-63 | 7632-IP | | | | | | | | |
| FORM NO. F-2148-A | | | | | | | | | |
| ISSUE NO. | | | | | | | | | APP. |
| APP. FOR RELEASE | ENGR. Krajnak | | | | | | | | DATE 2-14-63 |
| | SECT. HD. | | | | | | | | DATE |
| APP. FOR VENDORS QUOTATION | ENGR | | | | | | | | DATE |
| | SECT. HD | | | | | | | | DATE |
| a | b | c | d | e | f | g | h | i | |
| TOKYO ✓ | NEWPORT ✓ | | | | | | | | |
| M-H | | | | | | | | | |
| TORONTO ✓ | | | | | | | | | |
| | | | | | | | | | |
| REPRODUCTION LOCATED AT | | | | | JOB NOS 7632 | | | USED ON | |

LIMITS—ON DIMENSIONS WHERE LIMITS ARE NOT SHOWN USE THE FOLLOWING — ON ALL DECIMAL DIMENSIONS ± .005 ON ALL OTHER LINEAR DIMENSIONS ± 1/64 ANGULAR DIMENSIONS ± 1°

| DES. ENGR. | DRAWN | CHECKED | APPROVED |
|---|---|---|---|
| JK | MG | GB | |

WIRING DIAGRAM-INTERNAL
CL 15 CIRCULAR CHART (152)
OPTION
TABLE VII 018, 061, 062, 070, 161, 162, OR 163

MINNEAPOLIS-HONEYWELL REG. CO.
BROWN INSTRUMENTS DIVISION
PHILADELPHIA, PA., U. S. A. MP

| SCALE | DRAWING NO. | CL. |
|---|---|---|
| NONE | 371560 | 3 |
| DATE 2-5-63 | | |

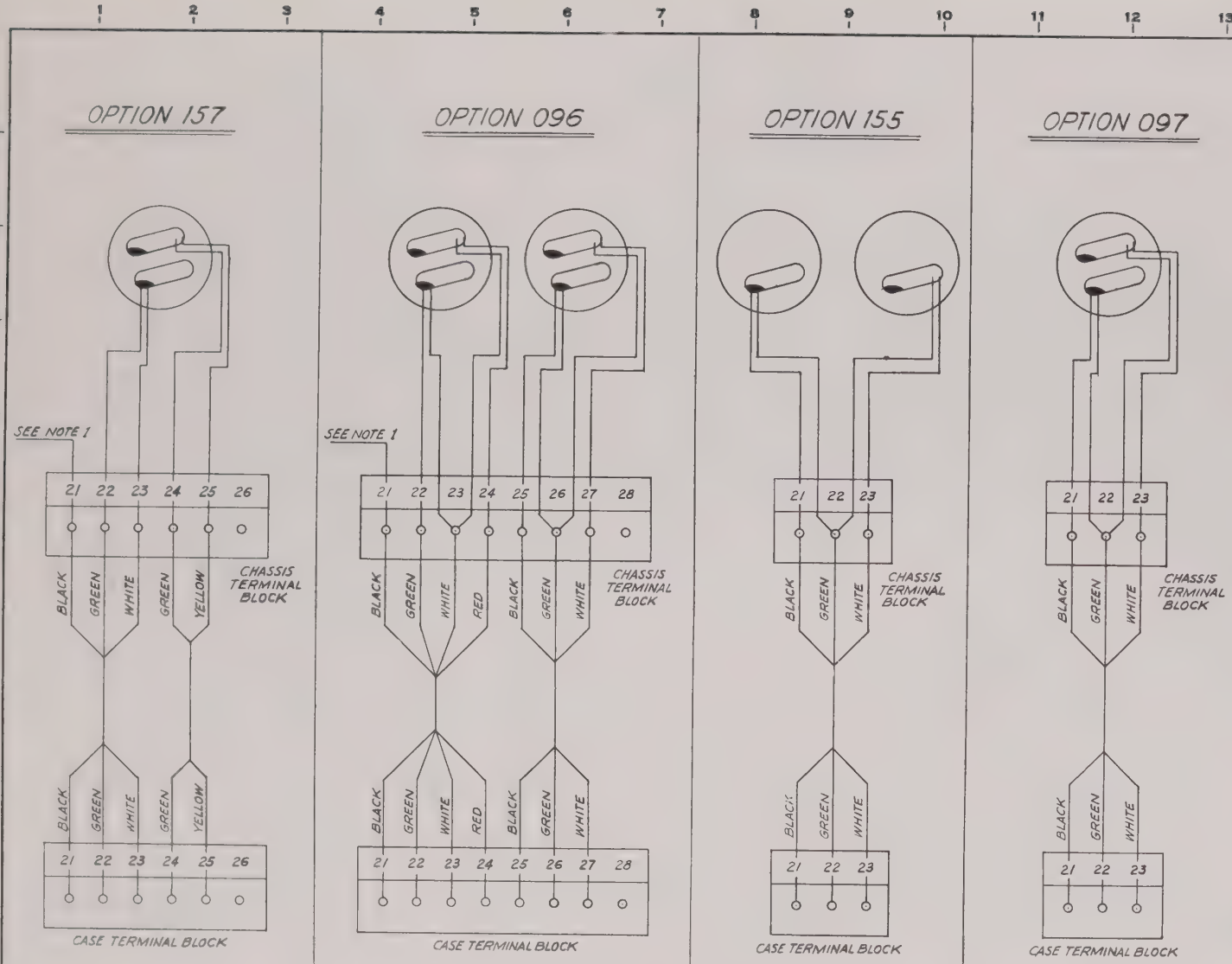


NOTE

1.- THIS LEAD IS CONNECTED TO CHASSIS TERMINAL BLOCK, TERMINAL "B" ON INSTRUMENTS WITH A POWER SWITCH OR TERMINAL "A" ON INSTRUMENTS WITHOUT A POWER SWITCH.

1. 2-6-63

FORM NO. F-2148-A 7632-1P

| ISSUE NO. | | APP |
|---|---|---|
| APP. FOR RELEASE | ENGR. Kraynak | DATE 2-14-63 |
| | SECT. HD. | DATE |
| APP. FOR VENDORS QUOTATION | ENGR | DATE |
| | SECT HD | DATE |

| a | b | c | d | e | f | g | h | j |
|---|---|---|---|---|---|---|---|---|
| TOKYO | ✓ | NEWHOUSE | ✓ | | | | | |
| M-H | | | | | | | | |
| TORONTO | ✓ | | | | | | | |
| [redacted] | | | | | 7632 | | | |
| REPRODUCTION LOCATED AT | | | | | JOB NOS | | USED ON | |

LIMITS—ON DIMENSIONS WHERE LIMITS ARE NOT SHOWN USE THE FOLLOWING -
ON ALL DECIMAL DIMENSIONS ± .005
ON ALL OTHER LINEAR DIMENSIONS ± 1/64
ANGULAR DIMENSIONS ± 1°

| DES. ENGR | DRAWN | CHECKED | APPROVED |
|---|---|---|---|
| GK | MG | [illegible] | |

WIRING DIAGRAM-INTERNAL
CL.15 CIRCULAR CHART (152)
AUX. HG. SWITCHES
TABLE VII 096, 097, 155 OR 157

MINNEAPOLIS-HONEYWELL REG. CO.
BROWN INSTRUMENTS DIVISION
PHILADELPHIA, PA., U. S. A. MP

| SCALE | DRAWING NO. | CL |
|---|---|---|
| NONE | 371561 | 3 |
| DATE 2-6-63 | | |

## OPTIONS 081,082,083,084

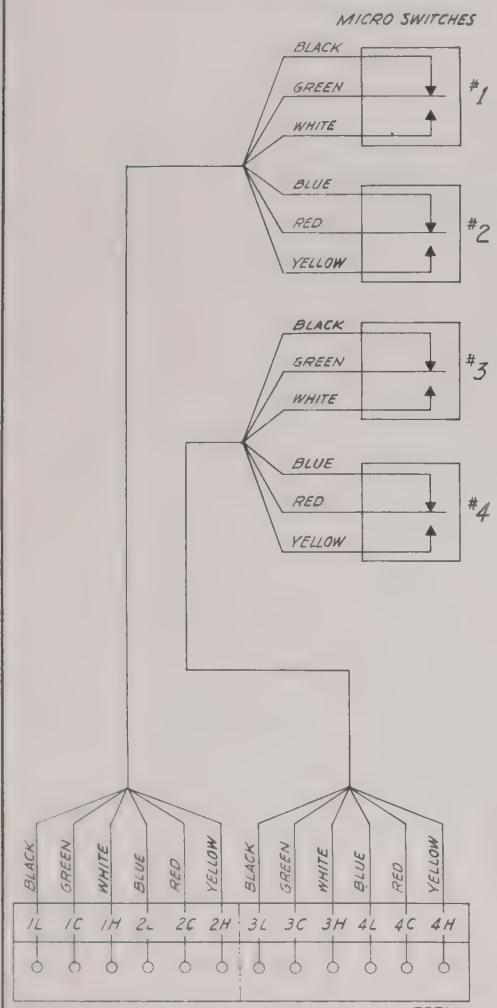


## OPTIONS 085,086,087,088

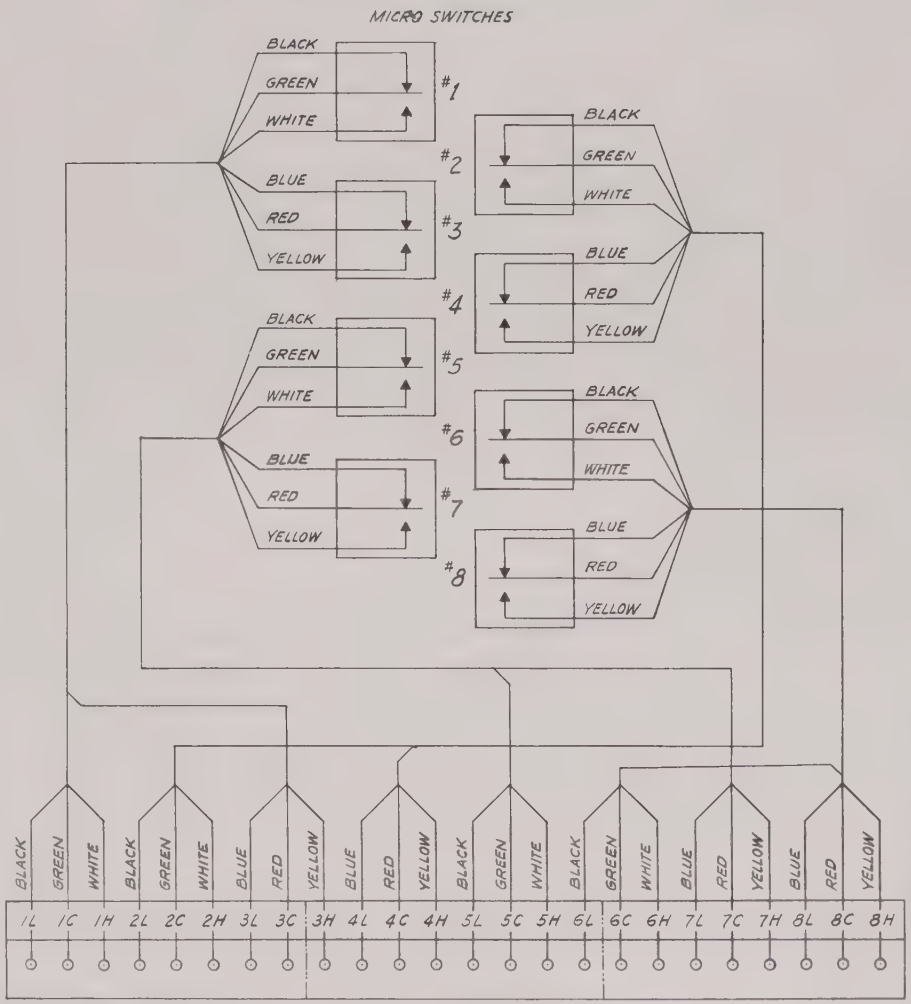


TERMINAL BLOCKS IN CASE

NOTES :-
1.- MICRO SWITCHES ARE NUMBERED WITH RESPECT TO POSITION ON CHASSIS. #1 SWITCH IS CLOSEST TO CHASSIS.
2.- LAST DIGIT OF OPTION NUMBER INDICATES THE NUMBER OF SWITCHES PROVIDED.
3.- LESSER NUMBER OF SWITCHES WIRED SIMILARLY.

| | | | |
|---|---|---|---|
| 1. 2-7-63 | | | |
| Form No. F-2148-A | 7632-1P | | APP. |
| ISSUE NO. | | | DATE |
| APP. FOR RELEASE | ENGR. Kamish | | 2-19-63 |
| | SECT. HD. | | DATE |
| APP. FOR VENDORS QUOTATION | ENGR. | | DATE |
| | SECT. HD. | | DATE |

a b c d e f g h i

TOKYO ✓ MINNEAPOLIS ✓ M-H
TORONTO ✓
7632
REPRODUCTION LOCATED AT | JOB NOS. | USED ON

LIMITS—ON DIMENSIONS WHERE LIMITS ARE NOT SHOWN USE THE FOLLOWING
ON ALL DECIMAL DIMENSIONS ± .005
ON ALL OTHER LINEAR DIMENSIONS ± 1/64
ANGULAR DIMENSIONS ± 1°

| DES. ENGR. | DRAWN | CHECKED | APPROVED |
|---|---|---|---|
| GR | MP | GS | |

# WIRING DIAGRAM-INTERNAL
CL 15 CIRCULAR CHART (152)
AUXILIARY MICRO SWITCHES
TABLE VII 081 TO 088

MINNEAPOLIS-HONEYWELL REG. CO.
BROWN INSTRUMENTS DIVISION
PHILADELPHIA, PA., U.S.A. MP

| SCALE | DRAWING NO. | CL |
|---|---|---|
| NONE | 371562 | 3 |
| DATE 2-7-63 | | |

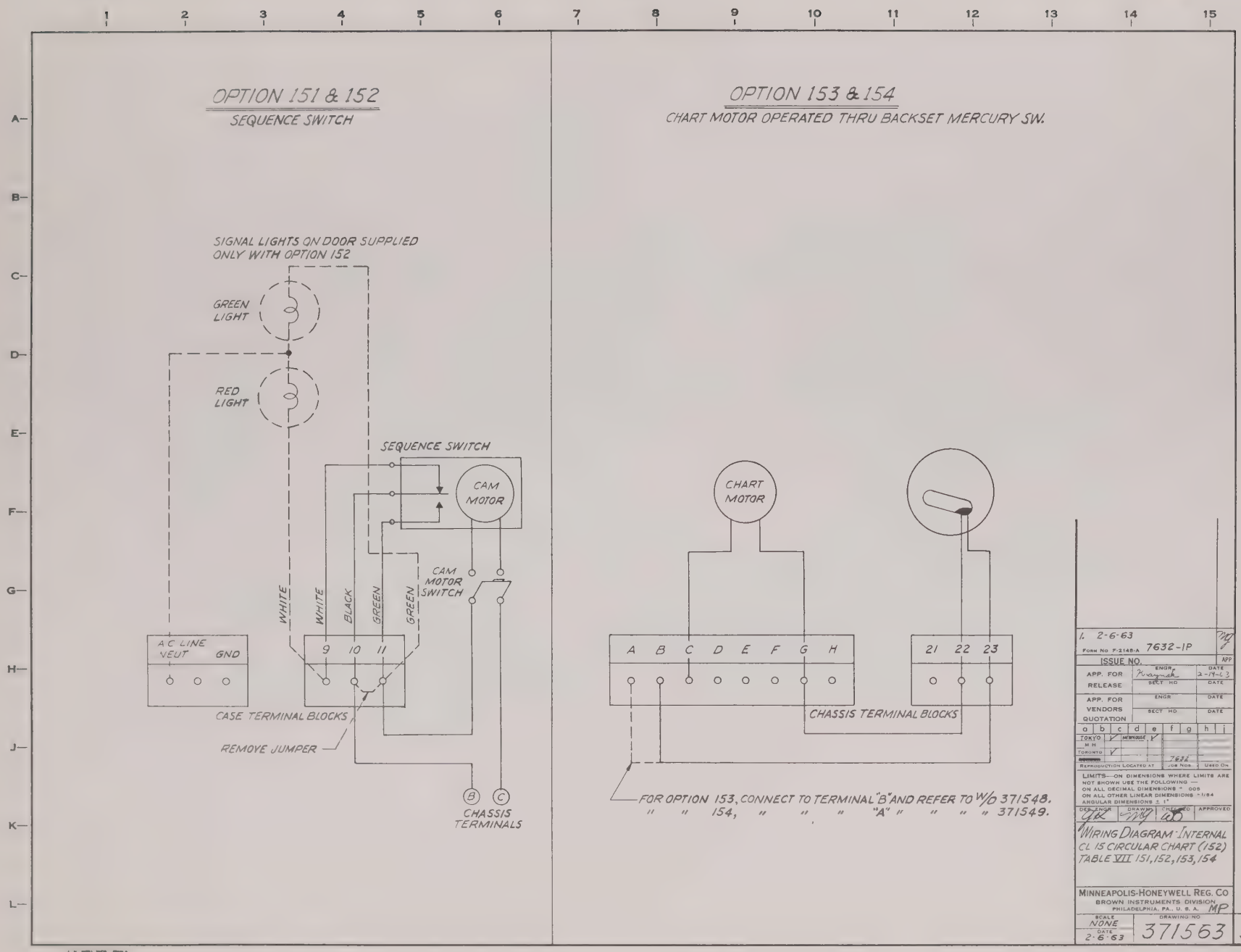
OPTION 151 & 152
SEQUENCE SWITCH
SIGNAL LIGHTS ON DOOR SUPPLIED ONLY WITH OPTION 152
GREEN LIGHT
RED LIGHT
SEQUENCE SWITCH
CAM MOTOR
CAM MOTOR SWITCH
WHITE
WHITE
BLACK
GREEN
GREEN
A C LINE
NEUT
GND
9
10
11
CASE TERMINAL BLOCKS
REMOVE JUMPER
B
C
CHASSIS TERMINALS
OPTION 153 & 154
CHART MOTOR OPERATED THRU BACKSET MERCURY SW.
CHART MOTOR
A
B
C
D
E
F
G
H
21
22
23
CHASSIS TERMINAL BLOCKS
FOR OPTION 153, CONNECT TO TERMINAL "B" AND REFER TO W/D 371548.
" " 154, " " " "A" " " " " 371549.
1. 2-6-63
FORM NO F-2148-A 7632-1P
ISSUE NO.
APP
APP. FOR RELEASE
ENGR
DATE
2-14-63
SECT HD
DATE
APP. FOR VENDORS QUOTATION
ENGR
DATE
SECT HD
DATE
a b c d e f g h i
TOKYO
M H
TORONTO
NEWHOUSE
7632
REPRODUCTION LOCATED AT
JOB NOS.
USED ON
LIMITS—ON DIMENSIONS WHERE LIMITS ARE NOT SHOWN USE THE FOLLOWING —
ON ALL DECIMAL DIMENSIONS ± .005
ON ALL OTHER LINEAR DIMENSIONS ± 1/64
ANGULAR DIMENSIONS ± 1°
DES. ENGR
DRAWN
CHECKED
APPROVED
WIRING DIAGRAM - INTERNAL
CL 15 CIRCULAR CHART (152)
TABLE VII 151, 152, 153, 154
MINNEAPOLIS-HONEYWELL REG. CO
BROWN INSTRUMENTS DIVISION
PHILADELPHIA, PA., U. S. A.
MP
SCALE
NONE
DATE
2-6-63
DRAWING NO
371563
CL
3

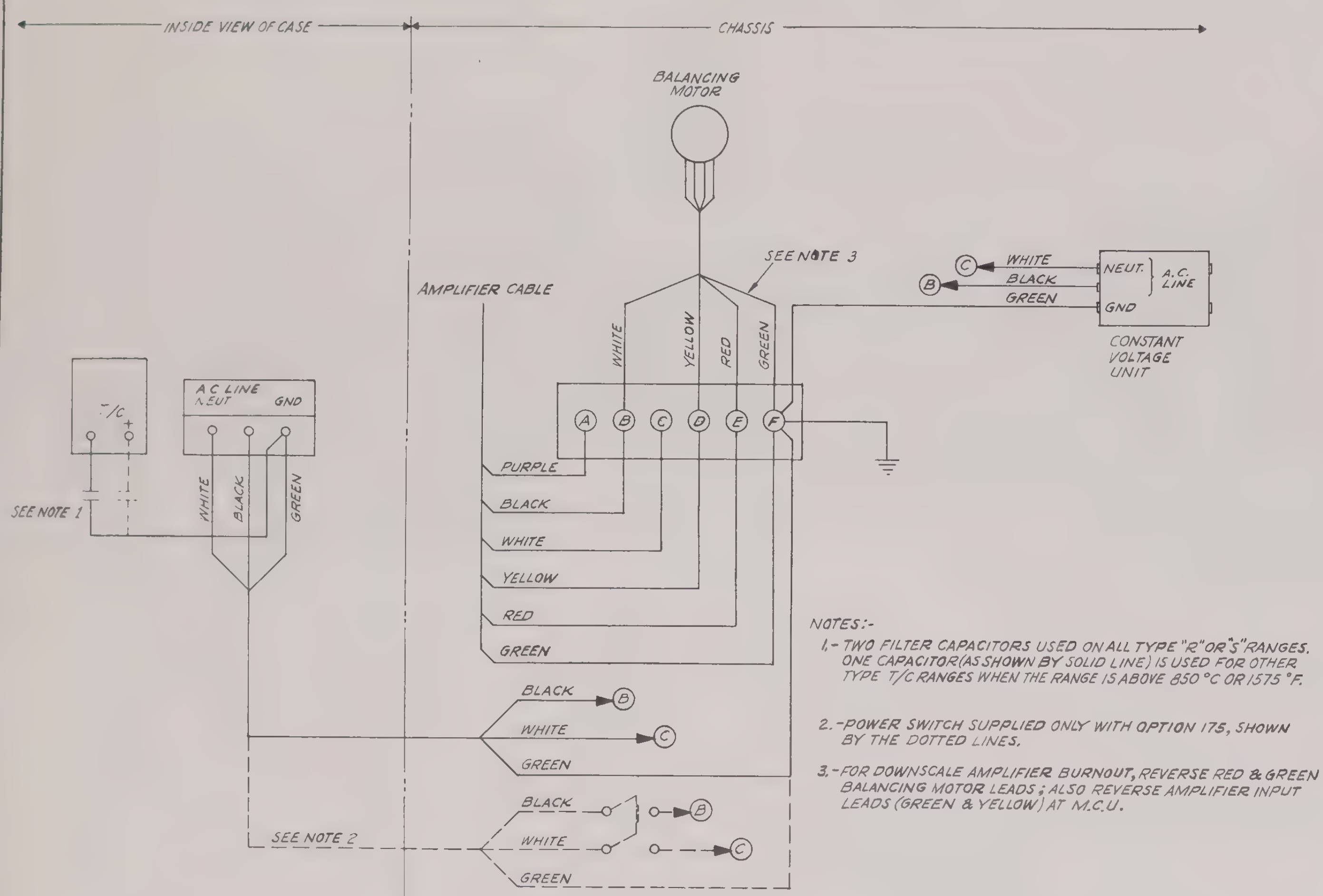


NOTES:-

1.- TWO FILTER CAPACITORS USED ON ALL TYPE "R" OR "S" RANGES. ONE CAPACITOR (AS SHOWN BY SOLID LINE) IS USED FOR OTHER TYPE T/C RANGES WHEN THE RANGE IS ABOVE 850 °C OR 1575 °F.

2.- POWER SWITCH SUPPLIED ONLY WITH OPTION 175, SHOWN BY THE DOTTED LINES.

3.- FOR DOWNSCALE AMPLIFIER BURNOUT, REVERSE RED & GREEN BALANCING MOTOR LEADS; ALSO REVERSE AMPLIFIER INPUT LEADS (GREEN & YELLOW) AT M.C.U.

| | | |
|---|---|---|
| 1. 2-16-63 | 7632-2P | MG |
| ISSUE NO. | | APP. |
| APP. FOR RELEASE | ENGR Kraynak; SECT. HD. J. Lungenberger | DATE 3/15/63; DATE 3-15-63 |
| APP. FOR VENDORS QUOTATION | ENGR; SECT HD | DATE; DATE |

| a | b | c | d | e | f | g | h | j |
|---|---|---|---|---|---|---|---|---|
| TOKYO M-H ✓ | NEWHOUSE ✓ | | | | | | | |
| TORONTO ✓ | | | | | | | | |

REPRODUCTION LOCATED AT | JOB NOS. 7632 | USED ON

LIMITS—ON DIMENSIONS WHERE LIMITS ARE NOT SHOWN USE THE FOLLOWING — ON ALL DECIMAL DIMENSIONS ± .008; ON ALL OTHER LINEAR DIMENSIONS ± 1/64; ANGULAR DIMENSIONS ± 1°

DESIGNER JK | DRAWN MG | CHECKED | APPROVED

WIRING DIAGRAM - INTERNAL
CL 15 ELECT. PNEU. TRANS. (158)
INSTRUMENT POWER CIRCUIT

MINNEAPOLIS-HONEYWELL REG. CO.
BROWN INSTRUMENTS DIVISION
PHILADELPHIA, PA., U. S. A. MP

SCALE NONE | DATE 2-16-63 | DRAWING NO. 371815 | CL 3

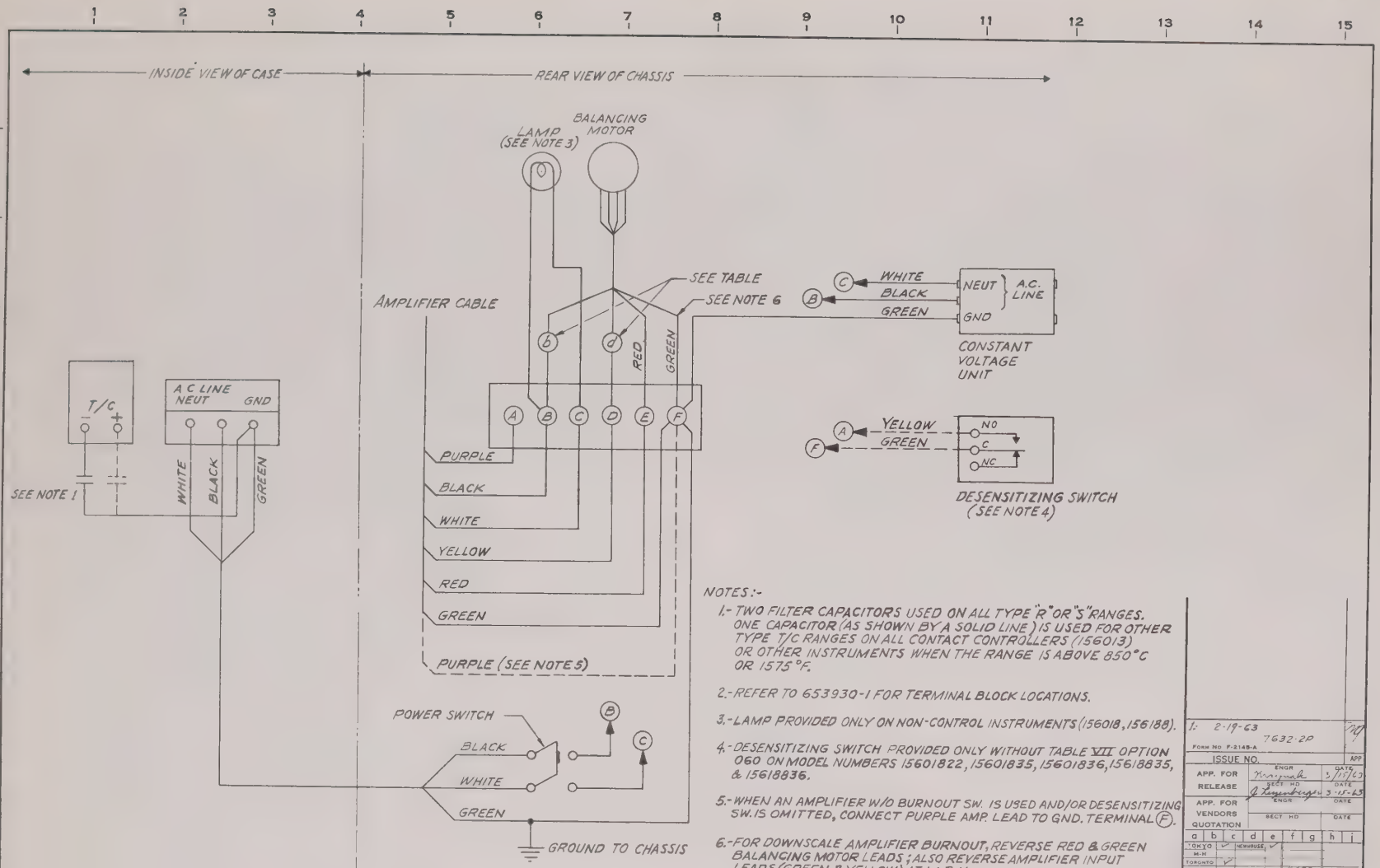


NOTES:-

1.- TWO FILTER CAPACITORS USED ON ALL TYPE "R" OR "S" RANGES. ONE CAPACITOR (AS SHOWN BY A SOLID LINE) IS USED FOR OTHER TYPE T/C RANGES ON ALL CONTACT CONTROLLERS (156013) OR OTHER INSTRUMENTS WHEN THE RANGE IS ABOVE 850°C OR 1575°F.

2.- REFER TO 653930-1 FOR TERMINAL BLOCK LOCATIONS.

3.- LAMP PROVIDED ONLY ON NON-CONTROL INSTRUMENTS (156018, 156188).

4.- DESENSITIZING SWITCH PROVIDED ONLY WITHOUT TABLE VII OPTION 060 ON MODEL NUMBERS 15601822, 15601835, 15601836, 15618835, & 15618836.

5.- WHEN AN AMPLIFIER W/O BURNOUT SW. IS USED AND/OR DESENSITIZING SW. IS OMITTED, CONNECT PURPLE AMP. LEAD TO GND. TERMINAL (F).

6.- FOR DOWNSCALE AMPLIFIER BURNOUT, REVERSE RED & GREEN BALANCING MOTOR LEADS; ALSO REVERSE AMPLIFIER INPUT LEADS (GREEN & YELLOW) AT M.C.U.

| BALANCE SPEED | RANGE | (b) LEAD COLOR | (d) LEAD COLOR |
|---|---|---|---|
| 1 & 2 | NORMAL | WHITE | YELLOW |
| 1 & 2 | REVERSED | YELLOW | WHITE |
| 3 | NORMAL | YELLOW | WHITE |
| 3 | REVERSED | WHITE | YELLOW |

1: 2-19-63 7632-2P

FORM NO. P-2148-A

ISSUE NO. | ENGR | DATE | APP

APP. FOR RELEASE | ENGR | DATE | PROJ. ENGR | DATE

APP. FOR VENDORS QUOTATION | SECT. HD. | DATE

| a | b | c | d | e | f | g | h | i | j |
|---|---|---|---|---|---|---|---|---|---|
| TOKYO | ✓ | NEWHOUSE | ✓ | | | | | | |
| M-H | | | | | | | | | |
| TORONTO | ✓ | | | | | | | | |
| | | | | | | 7632 | | | |

REPRODUCTION LOCATED AT | JOB NOS. | USED ON

LIMITS—ON DIMENSIONS WHERE LIMITS ARE NOT SHOWN USE THE FOLLOWING — ON ALL DECIMAL DIMENSIONS ± .005 ON ALL OTHER LINEAR DIMENSIONS ± 1/64 ANGULAR DIMENSIONS ± 1°

DES. DWGR. | DRAWN | CHECKED | APPROVED

WIRING DIAGRAM - INTERNAL
MODEL 156
INSTRUMENT POWER CIRCUIT WITH POWER SWITCH
MP

MINNEAPOLIS-HONEYWELL REG. CO.
BROWN INSTRUMENTS DIVISION
PHILADELPHIA, PA., U.S.A.

SCALE NONE | DRAWING NO. 371817 | SHT. 3

DATE 2-19-63

## CONTROL FORM 131

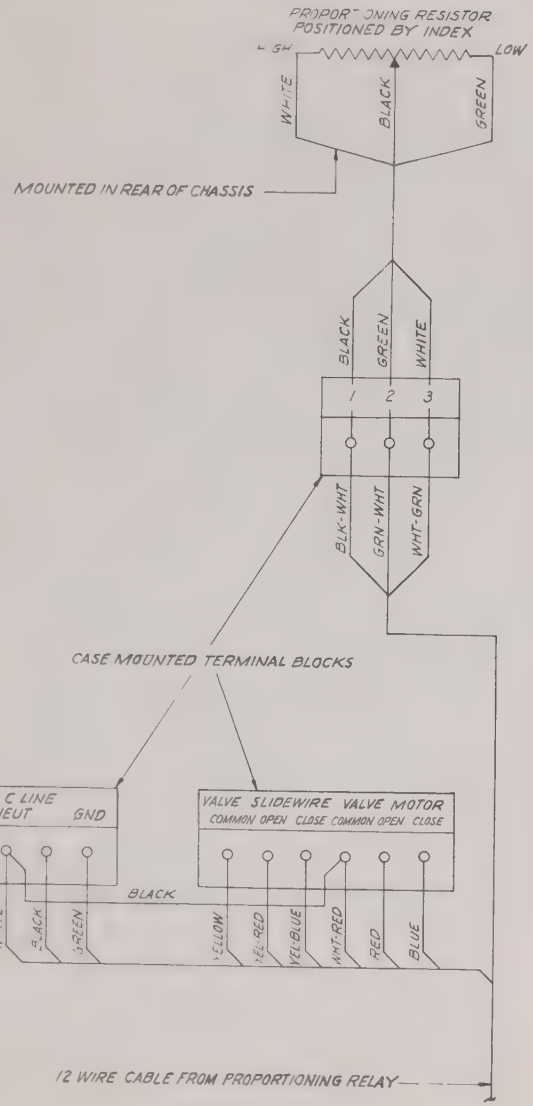


## CONTROL FORMS 013,014,& 015

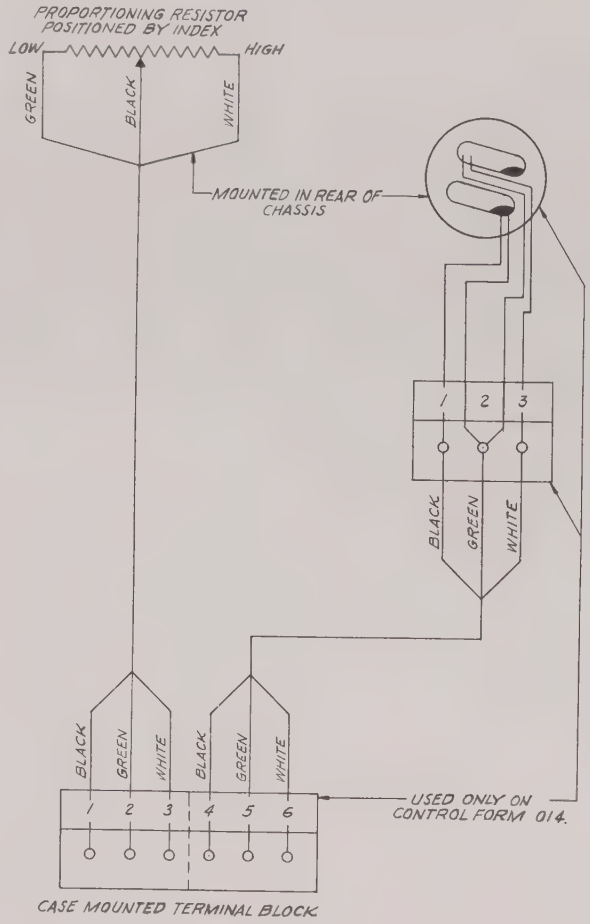


| | | | |
|---|---|---|---|
| 1. 2-19-63 | 7632-2P | | |
| Form No F-2148-A | | | |
| ISSUE NO. | | | APP |
| APP. FOR RELEASE | ENGR | | DATE 3/15/63 |
| | SECT HD | | DATE 3-19-63 |
| APP. FOR VENDORS QUOTATION | ENGR | | DATE |
| | SECT HD | | DATE |

| a | b | c | d | e | f | g | h | i |
|---|---|---|---|---|---|---|---|---|
| TOKYO | | NEWSDALE | | | | | | |
| M H | | | | | | | | |
| TORONTO | | | | | | | | |

| REPRODUCTION LOCATED AT | JOB NOS. | USED ON |
|---|---|---|
| | 7632 | |

LIMITS—ON DIMENSIONS WHERE LIMITS ARE NOT SHOWN USE THE FOLLOWING —
ON ALL DECIMAL DIMENSIONS ± .005
ON ALL OTHER LINEAR DIMENSIONS ± 1/64
ANGULAR DIMENSIONS ± 1°

| DES. ENGR. | DRAWN | CHECKED | APPROVED |
|---|---|---|---|
| ER | | | |

WIRING DIAGRAM-INTERNAL
MODEL 156
PROPORTIONAL CONTROL
TABLE IV 013,014,015,& 131

MINNEAPOLIS-HONEYWELL REG. CO.
BROWN INSTRUMENTS DIVISION
PHILADELPHIA, PA., U. S. A.

| SCALE | DRAWING NO | |
|---|---|---|
| NONE | 371818 | 3 |
| DATE 2-19-63 | | |

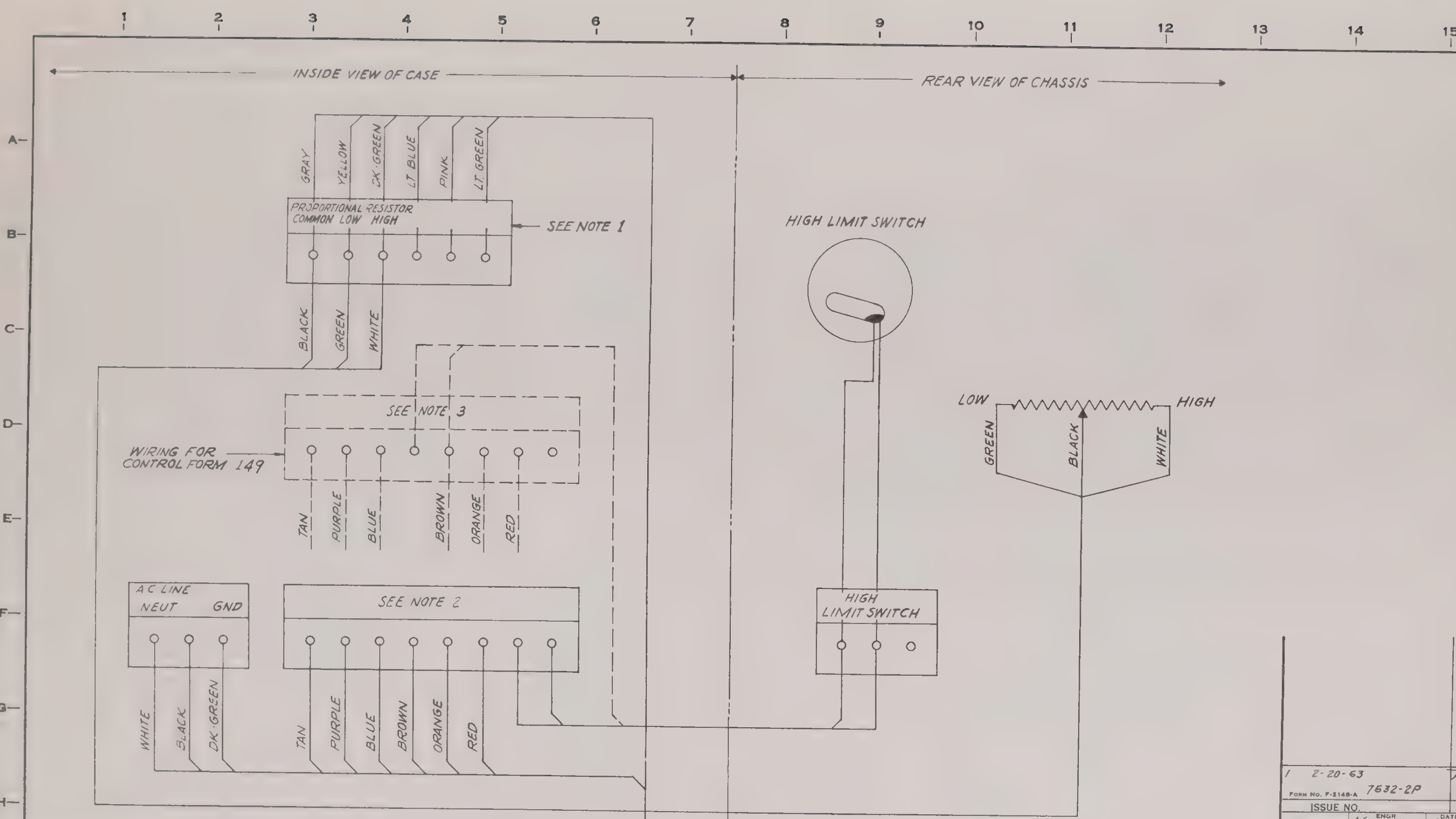


15 WIRE CABLE FROM PROPORTIONING CONTROL UNIT.

NOTES:

1.-

| CONTROL FORM | MARKER STRIP | | |
|---|---|---|---|
| | VALE SLIDWIRE COMMON | HIGH | LOW |
| 148 | | | |
| 149 | 51 | 52 | 53 |
| 150 | 51 | DC OUTPUT NEG. | POS. |

2.-

| CONTROL FORM | 8 POINT MARKER STRIP | | | | | | |
|---|---|---|---|---|---|---|---|
| 48 | PROGRAM | COMMON | VALVE MOTOR LOW | POWER | HIGH | 240V. | HIGH LIMIT SW. |
| 150 | PROGRAM | 47 | 48 | 49 | 50 | 240V. | HIGH LIMIT SW. |

3.-

| CONTROL FORM | 8 POINT MARKER STRIP | | | | | |
|---|---|---|---|---|---|---|
| 49 | PROGRAM | 46 | HEAT LIMIT SWITCH | POWER | COOL | 240V |

| ISSUE NO. | | |
|---|---|---|
| 1 | 2-20-63 | 7632-2P |

FORM NO. F-2148-A

APP. FOR RELEASE — ENGR: Kraynak, DATE 3/15/63; SECT HD: J. Ruyenberger, DATE 3-15-63

APP. FOR VENDORS QUOTATION — ENGR, SECT HD, DATE

a b c d e f g h i — TOKYO ✓, NEWHOUSE ✓, M H, TORONTO ✓

REPRODUCTION LOCATED AT — JOB NOS — USED ON

LIMITS—ON DIMENSIONS WHERE LIMITS ARE NOT SHOWN USE THE FOLLOWING
ON ALL DECIMAL DIMENSIONS ± .005
ON ALL OTHER LINEAR DIMENSIONS ±1/64
ANGULAR DIMENSIONS ± 1°

DES. ENGR: GK — DRAWN: MG — CHECKED — APPROVED

# WIRING DIAGRAM - INTERNAL MODEL 156 PROPORTIONAL CONTROL TABLE IV 148, 149, 150

MINNEAPOLIS-HONEYWELL REG. CO.
BROWN INSTRUMENTS DIVISION
PHILADELPHIA, PA. U.S.A.

SCALE: NONE — DATE: 2-20-63 — DRAWING NO: 371819 — 3

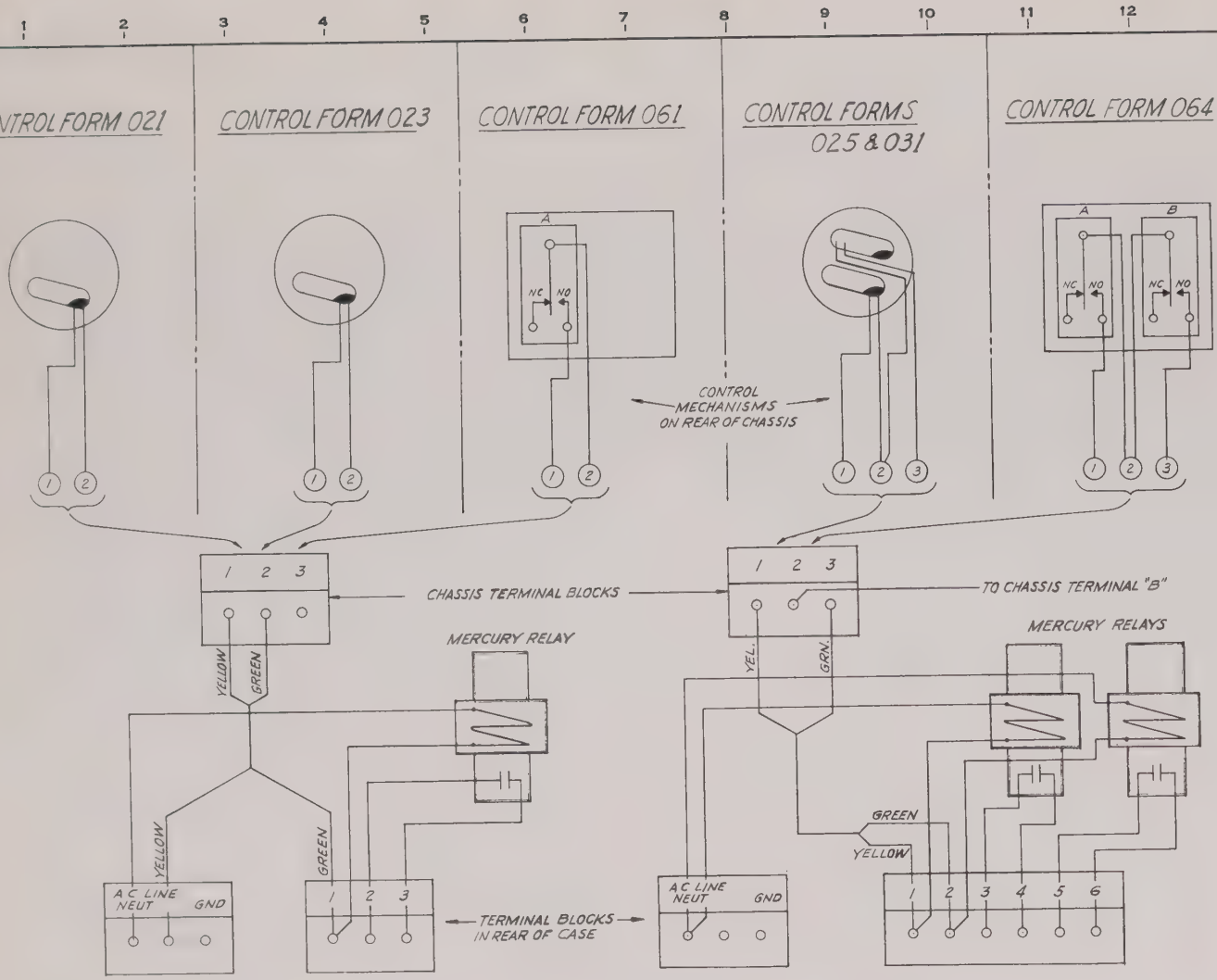


1. 2-21-63 MP
FORM NO. P-2148-A 7632-2P

| ISSUE NO. | ENGR | DATE |
|---|---|---|
| APP. FOR RELEASE | SECT. HD. | DATE |
| APP. FOR VENDORS QUOTATION | ENGR / SECT. HD. | DATE |

| a | b | c | d | e | f | g | h | i |
|---|---|---|---|---|---|---|---|---|
| TOKYO | V | REFERENCE | V | | | | | |
| M-H | | | | | | | | |
| TORONTO | V | | | | | | | |

REPRODUCTION LOCATED AT | JOB NO. 7632 | USED ON

LIMITS—ON DIMENSIONS WHERE LIMITS ARE NOT SHOWN USE THE FOLLOWING —
ON ALL DECIMAL DIMENSIONS ± .005
ON ALL OTHER LINEAR DIMENSIONS ± 1/64
ANGULAR DIMENSIONS ± 1°

| DES. ENGR | DRAWN | CHECKED | APPROVED |
|---|---|---|---|
| | MP | | |

# WIRING DIAGRAM-INTERNAL
## MODEL 156
## CONTACT CONTROL
## TABLE IV 021, 023, 025, 031 061, 064

MINNEAPOLIS-HONEYWELL REG. CO.
BROWN INSTRUMENTS DIVISION
PHILADELPHIA, PA., U.S.A. MP

| SCALE | DRAWING NO. | |
|---|---|---|
| NONE | 371820 | 3 |
| DATE 2-21-63 | | |

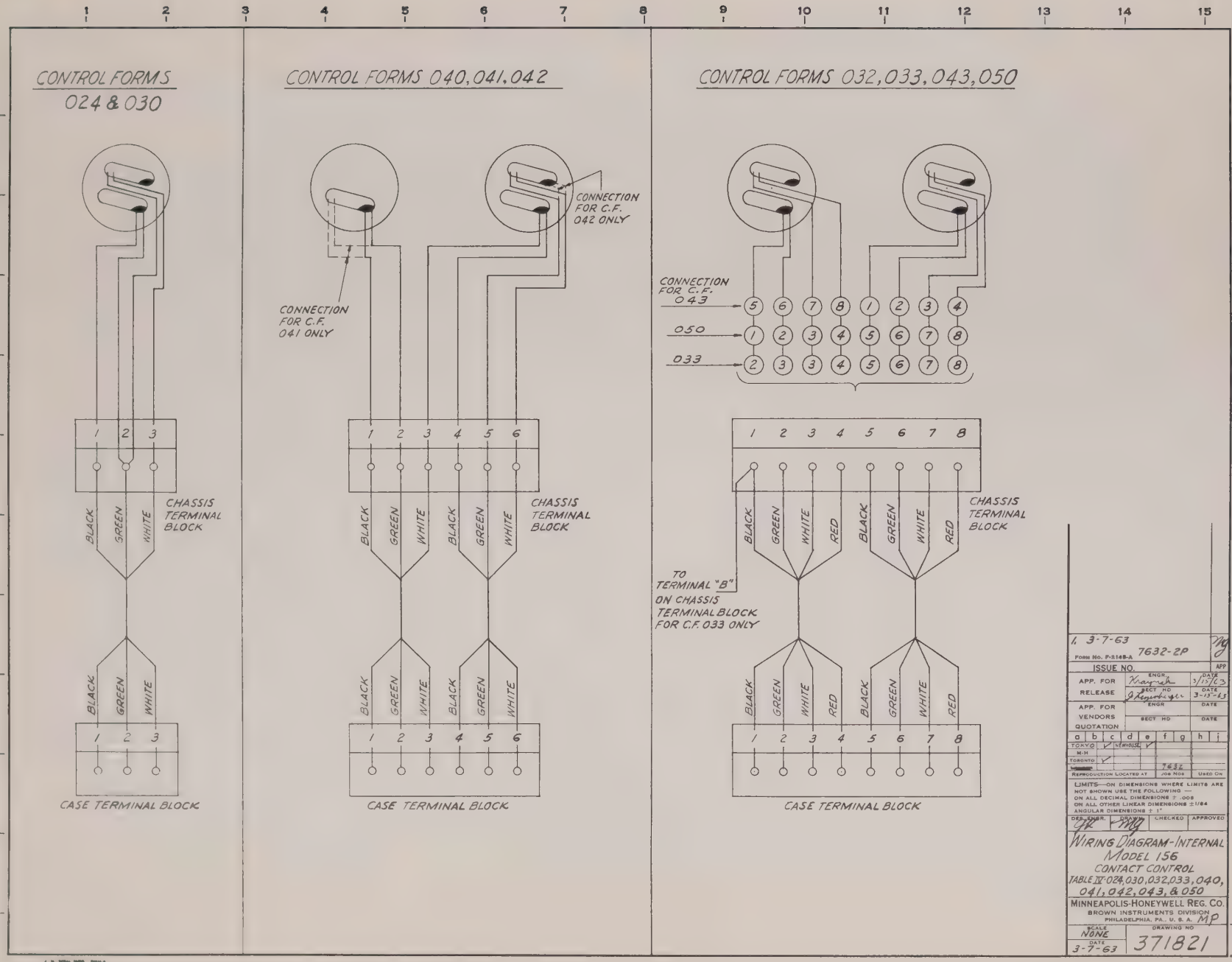
CONTROL FORMS 024 & 030
CONTROL FORMS 040, 041, 042
CONTROL FORMS 032, 033, 043, 050
CONNECTION FOR C.F. 042 ONLY
CONNECTION FOR C.F. 041 ONLY
CONNECTION FOR C.F. 043
050
033
CHASSIS TERMINAL BLOCK
BLACK
GREEN
WHITE
RED
TO TERMINAL "B" ON CHASSIS TERMINAL BLOCK FOR C.F. 033 ONLY
CASE TERMINAL BLOCK
1. 3-7-63
7632-2P
FORM No. P-2148-A
ISSUE NO.
APP. FOR RELEASE
APP. FOR VENDORS QUOTATION
ENGR.
SECT HD
DATE
3/15/63
3-15-63
TOKYO
M-H
TORONTO
7632
REPRODUCTION LOCATED AT
JOB NOS
USED ON
LIMITS—ON DIMENSIONS WHERE LIMITS ARE NOT SHOWN USE THE FOLLOWING —
ON ALL DECIMAL DIMENSIONS ± .005
ON ALL OTHER LINEAR DIMENSIONS ±1/64
ANGULAR DIMENSIONS ± 1°
DES. ENGR.
DRAWN
CHECKED
APPROVED
WIRING DIAGRAM-INTERNAL
MODEL 156
CONTACT CONTROL
TABLE IV-024, 030, 032, 033, 040, 041, 042, 043, & 050
MINNEAPOLIS-HONEYWELL REG. CO.
BROWN INSTRUMENTS DIVISION
PHILADELPHIA, PA., U. S. A.
MP
SCALE
NONE
DATE
3-7-63
DRAWING NO
371821
CL.
3

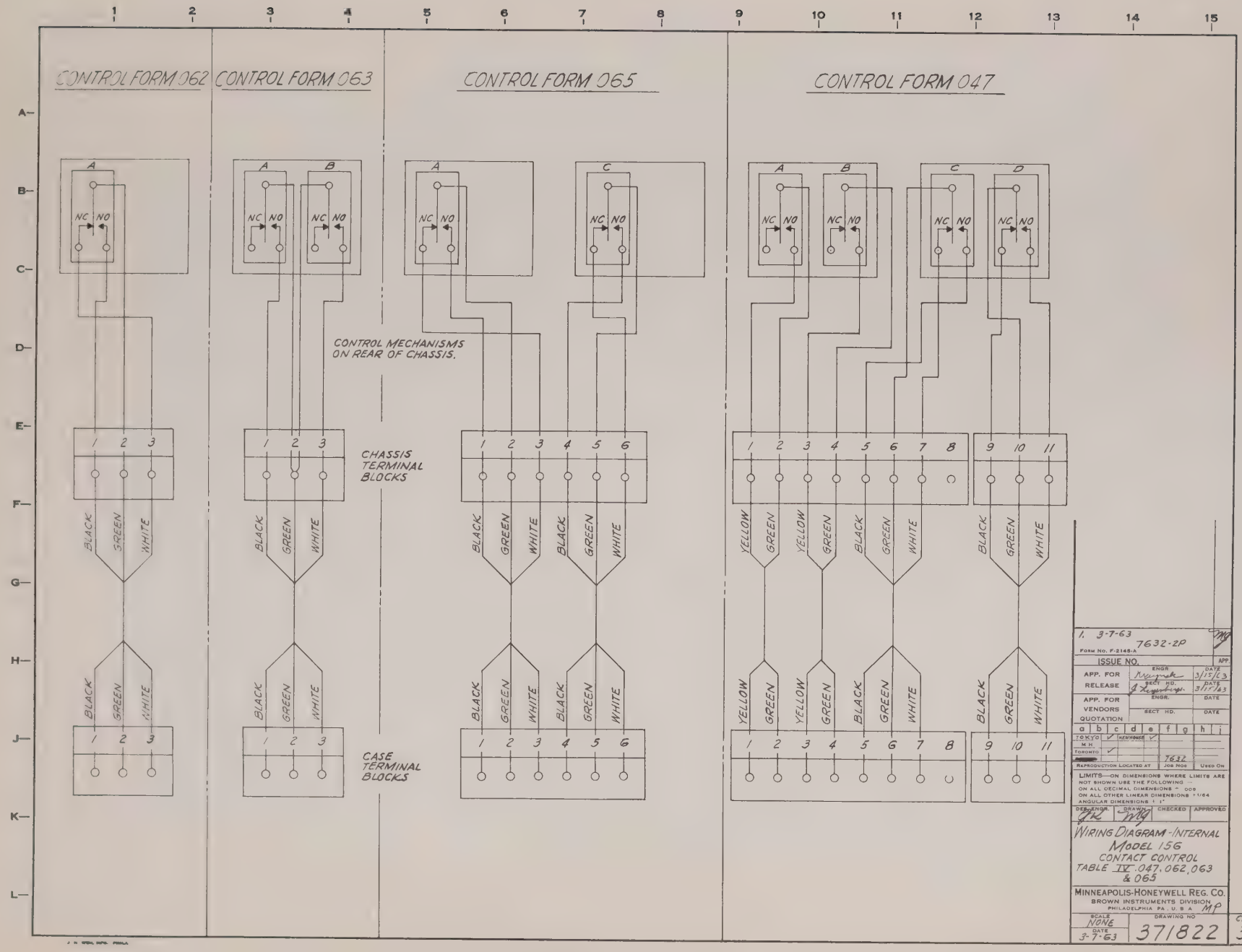
CONTROL FORM 062
CONTROL FORM 063
CONTROL FORM 065
CONTROL FORM 047
CONTROL MECHANISMS ON REAR OF CHASSIS.
CHASSIS TERMINAL BLOCKS
CASE TERMINAL BLOCKS
NC NO
BLACK
GREEN
WHITE
YELLOW
1. 3-7-63
Form No. F-2148-A
7632-2P
ISSUE NO.
APP. FOR RELEASE
APP. FOR VENDORS QUOTATION
LIMITS—ON DIMENSIONS WHERE LIMITS ARE NOT SHOWN USE THE FOLLOWING —
ON ALL DECIMAL DIMENSIONS ± .005
ON ALL OTHER LINEAR DIMENSIONS ± 1/64
ANGULAR DIMENSIONS ± 1°
DES. ENGR.
DRAWN
CHECKED
APPROVED
WIRING DIAGRAM - INTERNAL
MODEL 156
CONTACT CONTROL
TABLE IV 047, 062, 063 & 065
MINNEAPOLIS-HONEYWELL REG. CO.
BROWN INSTRUMENTS DIVISION
PHILADELPHIA PA. U.S.A.
SCALE NONE
DATE 3-7-63
DRAWING NO
371822
CL 3

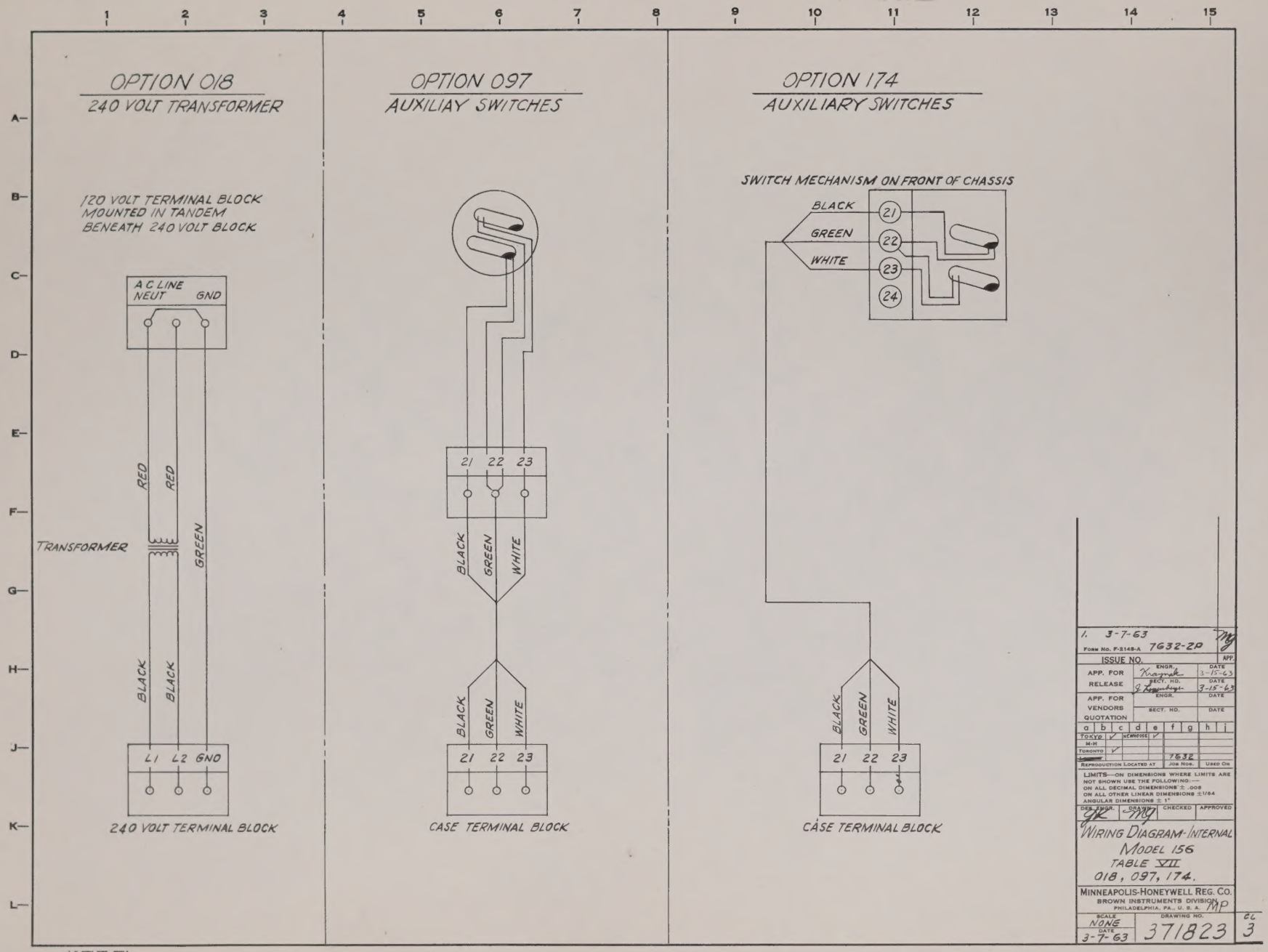
OPTION 018
240 VOLT TRANSFORMER
120 VOLT TERMINAL BLOCK
MOUNTED IN TANDEM
BENEATH 240 VOLT BLOCK
A C LINE
NEUT
GND
RED
RED
GREEN
TRANSFORMER
BLACK
BLACK
L1 L2 GND
240 VOLT TERMINAL BLOCK
OPTION 097
AUXILIAY SWITCHES
21 22 23
BLACK
GREEN
WHITE
BLACK
GREEN
WHITE
21 22 23
CASE TERMINAL BLOCK
OPTION 174
AUXILIARY SWITCHES
SWITCH MECHANISM ON FRONT OF CHASSIS
BLACK
GREEN
WHITE
21
22
23
24
BLACK
GREEN
WHITE
21 22 23
CASE TERMINAL BLOCK
1. 3-7-63
FORM NO. F-2148-A 7632-2P
ISSUE NO.
APP.
APP. FOR RELEASE
ENGR.
DATE 3-15-63
SECT. HD.
DATE 3-15-63
APP. FOR VENDORS QUOTATION
ENGR.
DATE
SECT. HD.
DATE
a b c d e f g h i
TOKYO ✓ NEWHOUSE ✓
M-H
TORONTO ✓
7632
REPRODUCTION LOCATED AT
JOB NOS.
USED ON
LIMITS—ON DIMENSIONS WHERE LIMITS ARE NOT SHOWN USE THE FOLLOWING:—
ON ALL DECIMAL DIMENSIONS ± .005
ON ALL OTHER LINEAR DIMENSIONS ± 1/64
ANGULAR DIMENSIONS ± 1°
DES. ENGR.
DRAWN
CHECKED
APPROVED
WIRING DIAGRAM-INTERNAL
MODEL 156
TABLE VII
018, 097, 174.
MINNEAPOLIS-HONEYWELL REG. CO.
BROWN INSTRUMENTS DIVISION
PHILADELPHIA, PA., U. S. A.
SCALE NONE
DATE 3-7-63
DRAWING NO. 371823
CL 3

ACCOPRESS BINDER
BF 2507 EMB
To hold sheet size 11 x 8½.
Also available in special sizes up to 35½" x 39½" sheet size. Specify binding side first when ordering.
Manufactured By
Acco Products, Inc., Ogdensburg, N.Y., U. S. A.

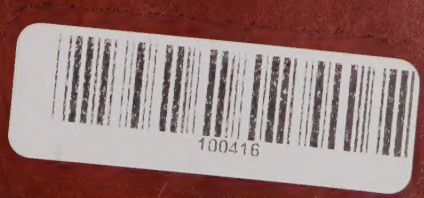
100416